G2A38 · Shoulder Trainer

INSTALLATION MANUAL

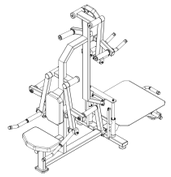

Before Installation

Before You Start

01 Read all instructions before installation. Check all parts and quantities against the parts list. Contact after-sales service immediately if any part is missing or damaged in transit.

02 Assemble the equipment according to the instructions. After assembly, understand all functions before use. Stop using the equipment immediately if a problem occurs to prevent injury or equipment damage. Check the instructions and contact after-sales service if the problem cannot be resolved.

Tools Required

- Rubber Mallet
- Snap-Ring Pliers
- Spirit Level
- Adjustable Wrench
- Hex Keys
- 2 People

Assembly

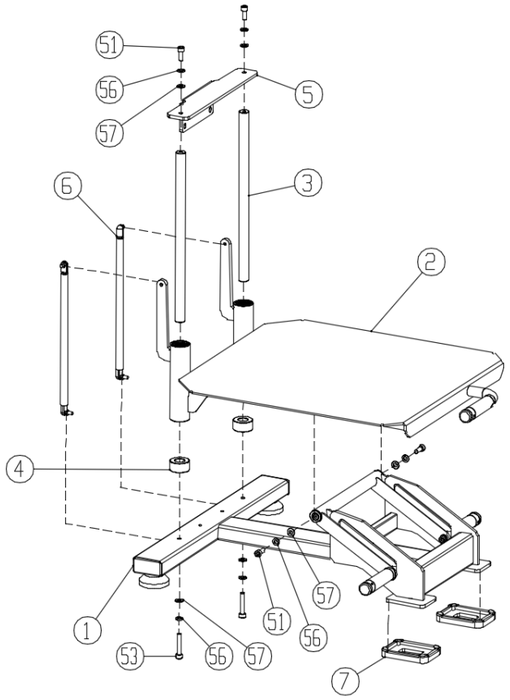

STEP 1, 2 & 3

STEP 1

Install two rectangular foot pads (#7) on the footplate base frame (#1).

HARDWARE

- Rectangular Foot Pad (#7) × 2

STEP 2

Install the footplate assembly (#2), two slide rail rods (#3), two slide rail rod rubber pads (#4), and the slide rail rod fixing plate (#5) on the footplate base frame (#1) with the listed hardware.

HARDWARE

- Socket Head Cap Screw M10×25 (#51) × 4
- Socket Head Cap Screw M10×55 (#53) × 2
- Spring Washer M10 (#56) × 6
- Flat Washer M10-D20 (#57) × 6

STEP 3

Install the two gas springs (#6) between the footplate base frame (#1) and the footplate assembly (#2).

HARDWARE

- Gas Spring (#6) × 2

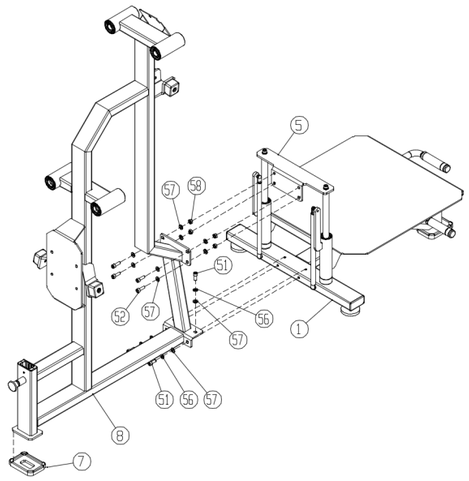

STEP 4 & 5

STEP 4
Fasten the upright frame assembly (#8) to the footplate base frame (#1) and slide rail rod fixing plate (#5) with the listed hardware.

HARDWARE
- Socket Head Cap Screw M10×25 (#51) × 4
- Socket Head Cap Screw M10×30 (#52) × 4
- Spring Washer M10 (#56) × 4
- Flat Washer M10-D20 (#57) × 12
- Self-Locking Hex Nut M10 (#58) × 4

STEP 5
Install one rectangular foot pad (#7) on the upright frame assembly (#8).

HARDWARE
- Rectangular Foot Pad (#7) × 1

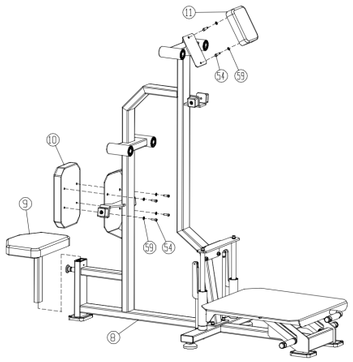

STEP 6, 7 & 8

STEP 6
Install the seat adjustment frame assembly (#9) on the upright frame assembly (#8).

STEP 7
Fasten the back pad (#10) to the upright frame assembly (#8) with the listed hardware.

HARDWARE
- Socket Head Cap Screw M8×25 (#54) × 4
- Flat Washer M8-D16 (#59) × 4

STEP 8
Fasten the head pad (#11) to the upright frame assembly (#8) with the listed hardware.

HARDWARE
- Socket Head Cap Screw M8×25 (#54) × 2
- Flat Washer M8-D16 (#59) × 2

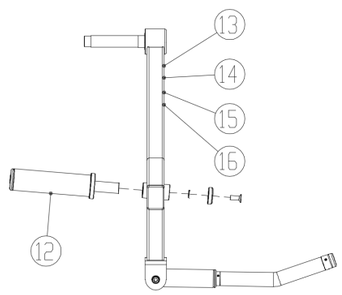

STEP 9

ACTION
Install the four lever arm sleeve assemblies (#12), one on the left long lever arm (#13), right long lever arm (#14), left short lever arm (#15), and right short lever arm (#16).

HARDWARE
- Lever Arm Sleeve Assembly (#12) × 4

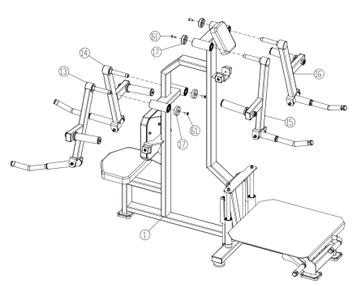

STEP 10

ACTION
Install the left long lever arm (#13), right long lever arm (#14), left short lever arm (#15), and right short lever arm (#16) on the upright frame assembly (#8) with the listed parts and screws.

HARDWARE
- 60 Tube Aluminum Cap (#17) × 4
- Hex Socket Countersunk Head Screw M10×25 (#61) × 4

FINAL CHECK

01 Check that the assembled machine is level and vertical.

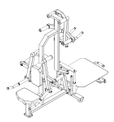

Parts List

Preassembled parts are not listed in this table.

NO.	PART / SPECIFICATION	QTY
1	Footplate Base Frame	1
2	Footplate Assembly	1
3	Slide Rail Rod	2
4	Slide Rail Rod Rubber Pad	2
5	Slide Rail Rod Fixing Plate	1
6	Gas Spring	2
7	Rectangular Foot Pad	3
8	Upright Frame Assembly	1
9	Seat Adjustment Frame Assembly	1

NO.	PART / SPECIFICATION	QTY
10	Back Pad	1
11	Head Pad	1
12	Lever Arm Sleeve Assembly	4
13	Left Long Lever Arm	1
14	Right Long Lever Arm	1
15	Left Short Lever Arm	1
16	Right Short Lever Arm	1
17	60 Tube Aluminum Cap	4
51	Socket Head Cap Screw M10×25	8

NO.	PART / SPECIFICATION	QTY
52	Socket Head Cap Screw M10×30	4
53	Socket Head Cap Screw M10×55	2
54	Socket Head Cap Screw M8×25	6
56	Spring Washer M10	10
57	Flat Washer M10-D20	18
58	Self-Locking Hex Nut M10	4
59	Flat Washer M8-D16	6
61	Hex Socket Countersunk Head Screw M10×25	4