G2039 · Pullover

INSTALLATION MANUAL



Before Installation

Before You Start

01 Read these instructions carefully before installation. Check the parts list to confirm that all parts and quantities are complete; if any parts are missing or damaged during transport, contact after-sales support immediately. Assemble the equipment according to these instructions.

Tools Required

- Rubber Mallet
- Spirit Level
- Hex Keys
- Snap-Ring Pliers
- Adjustable Wrench
- 2 People

Fastener Reference



#51
Socket Head Cap Screw M10×60



#55
Socket Head Cap Screw M10×25



#59
Flat Washer M10-D30



#52
Hex Socket Countersunk Head Screw M10×25



#56
Socket Head Cap Screw M8×25



#60
Spring Washer M8

#53
Socket Head Cap Screw M8×25



#57
Hex Lock Nut M10



#61
Flat Washer M10-D50



#54
Socket Head Cap Screw M10×35



#58
Spring Washer M10



#61
Flat Washer M10-D50

Assembly

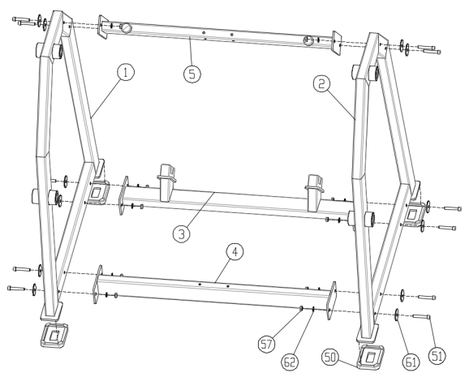

STEP 1

ACTION
Install the rectangular foot pads (#50) under the left frame (#1) and right frame (#2), then connect the right frame (#1), left frame (#2), rear connecting frame (#3), lower connecting bar (#4), and upper connecting frame (#5).

HARDWARE



Left Frame (#1) × 1



Right Frame (#2) × 1

Rear Connecting Frame (#3) × 1

Lower Connecting Bar (#4) × 1

Upper Connecting Frame (#5) × 1



Rectangular Foot Pad (#50) × 1

Socket Head Cap Screw M10×60 (#51) × 12



Flat Washer M10-D50 (#61) × 12



Flat Washer M10-D20 (#62) × 12



Hex Lock Nut M10 (#57) × 12

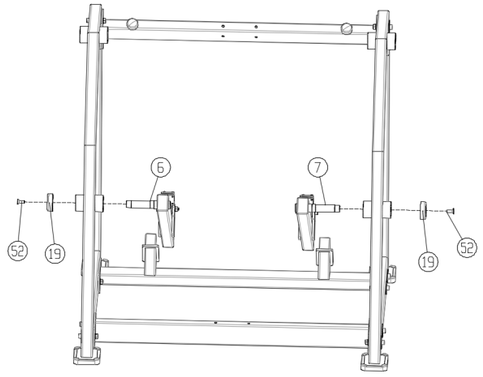

STEP 2

ACTION
Install the right lever arm assembly (#6), left lever arm assembly (#7), and aluminum caps (#19) at both ends onto the Step 1 assembly.

HARDWARE

Right Lever Arm Assembly (#6) × 1

Left Lever Arm Assembly (#7) × 1



Aluminum Cap (#19) × 1



Hex Socket Countersunk Head Screw M10×25 (#52) × 2

STEP 3

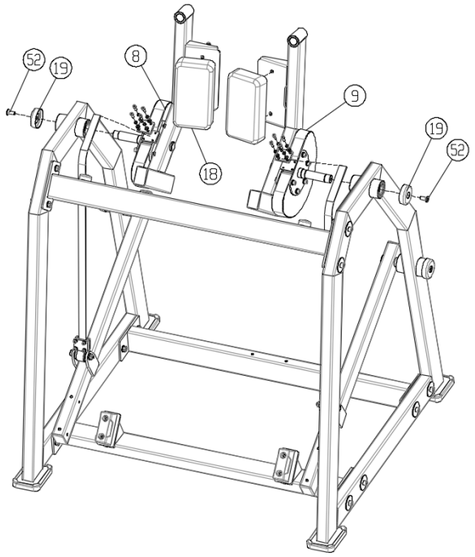

ACTION

Install the left small lever arm assembly (#8), right small lever arm assembly (#9), and aluminum caps at both ends onto the Step 2 assembly, install the arm pads (#18) on the left small lever arm assembly (#8) and right small lever arm assembly (#9), and secure the belts of the right lever arm assembly (#6) and left lever arm assembly (#7) with the clamps.

HARDWARE

Left Small Lever Arm Assembly (#8)	× 1	Right Small Lever Arm Assembly (#9)	× 1
Arm Pad (#18)	× 2	Hex Socket Countersunk Head Screw M10×25 (#52)	× 2
Aluminum Cap (#19)	× 2	Flat Washer M8-D16 (#63)	× 2

STEP 4

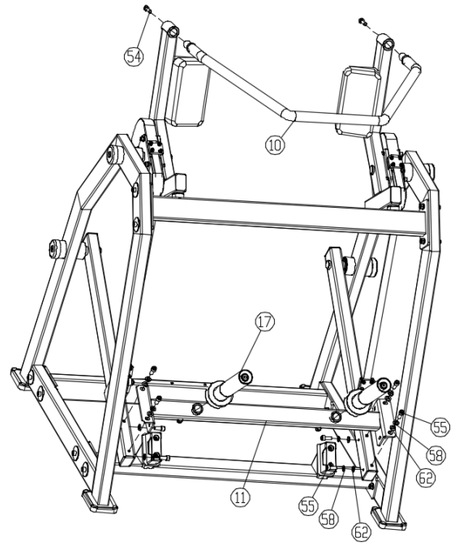

ACTION

Install the press-down handle assembly (#10) and weight plate horn (#11) onto the Step 3 assembly, then install the lever arm sleeve assemblies (#17) on the weight plate horn.

HARDWARE

Press-Down Handle Assembly (#10)	× 1	Weight Plate Horn (#11)	× 1
Lever Arm Sleeve Assembly (#17)	× 2	Socket Head Cap Screw M10×25 (#55)	× 10
Spring Washer M10 (#58)	× 8	Flat Washer M10-D20 (#62)	× 8
Hex Socket Countersunk Head Screw M10×25 (#52)	× 2	Flat Washer M10-D30 (#59)	× 2
Socket Head Cap Screw M10×35 (#54)	× 2	Socket Head Cap Screw M10×25	× 10

STEP 5

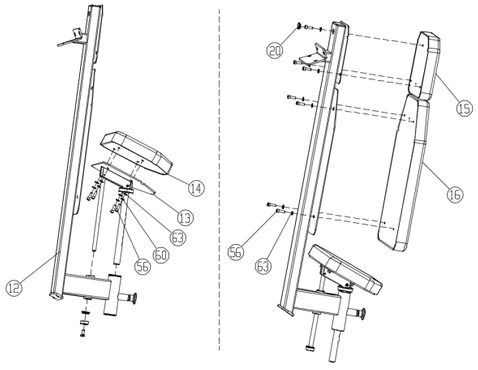

ACTION

Install the seat assembly (#13), seat pad (#14), large back pad (#16), and head pad (#15) on the backrest frame (#12), then install the end plug (#20) in the predrilled hole after the head pad (#15) screws are installed.

HARDWARE

Backrest Frame (#12)	× 1	Seat Assembly (#13)	× 1
Seat Pad (#14)	× 1	Large Back Pad (#16)	× 1
Head Pad (#15)	× 1	End Plug (#20)	× 1
Socket Head Cap Screw M8×25 (#56)	× 11	Spring Washer M8 (#60)	× 4
Flat Washer M8-D16 (#63)	× 11		

STEP 6

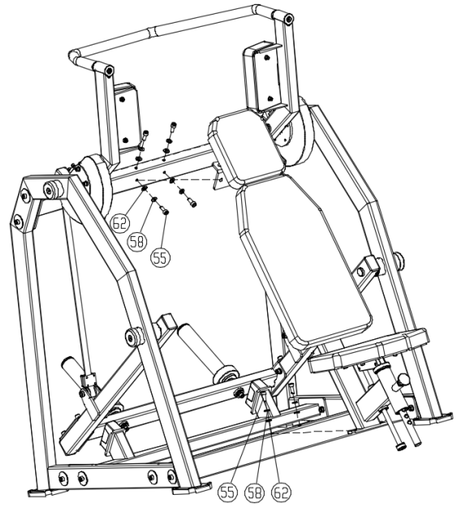

ACTION

Connect the completed Step 4 assembly to the completed Step 5 assembly.

HARDWARE

Socket Head Cap Screw M10×25 (#55)	× 6
Spring Washer M10 (#58)	× 6
Flat Washer M10-D20 (#62)	× 6

FINAL CHECK

01 Model G2039 is now fully assembled. Check that the equipment is level and plumb.



Parts List

NO.	PART / SPECIFICATION	QTY
1	Left Frame	1
2	Right Frame	1
3	Rear Connecting Frame	1
4	Lower Connecting Bar	1
5	Upper Connecting Frame	1
6	Right Lever Arm Assembly	1
7	Left Lever Arm Assembly	1
8	Left Small Lever Arm Assembly	1
9	Right Small Lever Arm Assembly	1
10	Press-Down Handle Assembly	1
11	Weight Plate Horn	1
12	Backrest Frame	1

NO.	PART / SPECIFICATION	QTY
13	Seat Assembly	1
14	Seat Pad	1
15	Head Pad	1
16	Large Back Pad	1
17	Lever Arm Sleeve Assembly	2
18	Arm Pad	2
19	Aluminum Cap	4
20	End Plug	1
50	Rectangular Foot Pad	4
51	Socket Head Cap Screw M10×60	12
52	Hex Socket Countersunk Head Screw M10×25	4
53	Socket Head Cap Screw M8×25	2

NO.	PART / SPECIFICATION	QTY
54	Socket Head Cap Screw M10×35	2
55	Socket Head Cap Screw M10×25	16
56	Socket Head Cap Screw M8×25	11
57	Hex Lock Nut M10	12
58	Spring Washer M10	14
59	Flat Washer M10-D30	2
60	Spring Washer M8	4
61	Flat Washer M10-D50	12
62	Flat Washer M10-D20	26
63	Flat Washer M8-D16	13