G2B20 · 82B20 · Standing Belt-Style Squat Trainer

INSTALLATION MANUAL



Before Installation

Before You Start

01 Read these instructions carefully before assembly. Check all parts and quantities against the parts list. If any parts are missing or damaged in transit, contact after-sales service immediately. Assemble the equipment according to these instructions.

02 This equipment is designed for smooth and effective exercise. After assembly, learn all functions before use. Stop using the equipment immediately if a problem occurs to prevent injury or equipment damage. Check the instructions for the cause; if the problem cannot be resolved, contact after-sales service.

Tools Required

- Rubber Mallet
- Spirit Level
- Hex Keys
- Snap-Ring Pliers
- Adjustable Wrench
- 2 People

Assembly

STEP 1

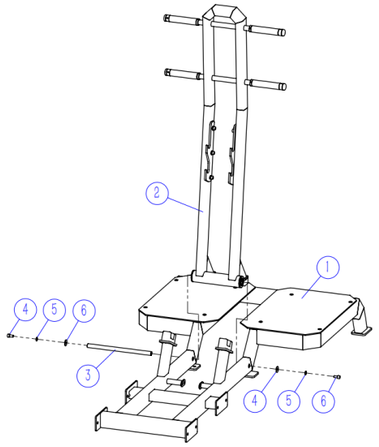

ACTION

Connect the standing squat trainer base frame (#1) to the standing squat trainer lever arm stop frame (#2).

HARDWARE

#3 **× 1**
Shaft 20×350

#4 **× 2**
Socket head cap screw M10×20

#5 **× 2**
Spring washer M10

#6 **× 2**
Flat washer M10-D30

STEP 2

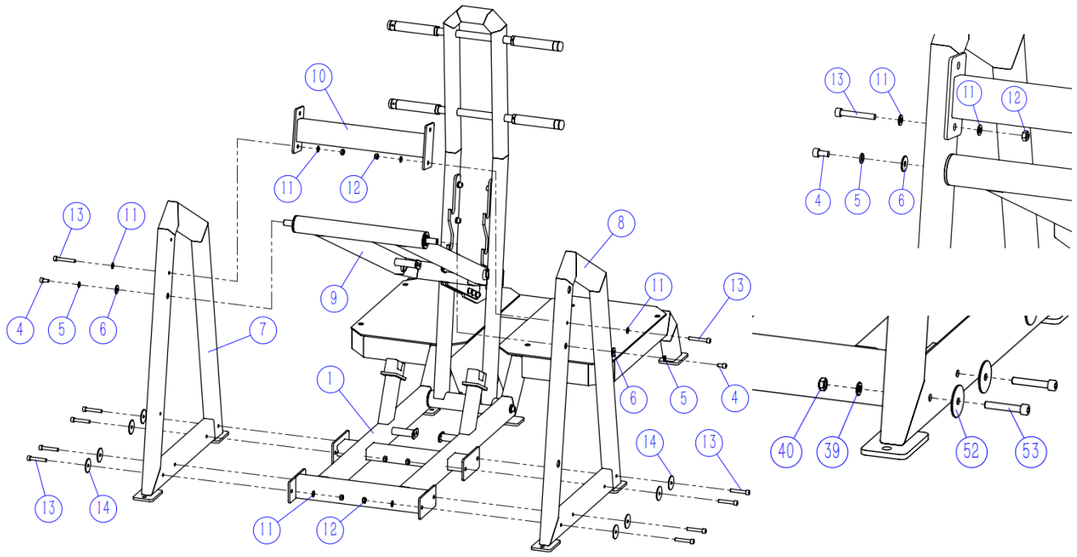

ACTION

Connect the standing squat trainer base frame (#1), standing squat trainer lever arm (#9), and lever arm support frame (#10) to the squat trainer left frame (#7) and squat trainer right frame (#8).

HARDWARE

#4 × 2 Socket head cap screw M10×20	#5 × 2 Spring washer M10	#6 × 2 Flat washer M10-D30
#13 × 10 Socket head cap screw M10×60	#14 × 8 Flat washer M10-D50	#12 × 10 Self-locking nut M10
#11 × 12 Flat washer M10-D20		

STEP 3

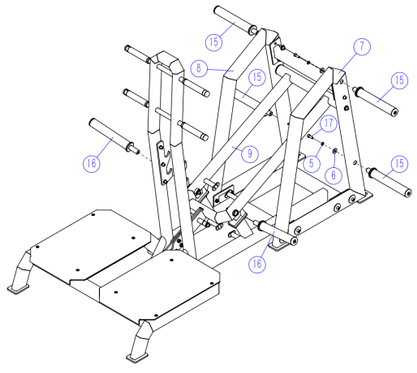

ACTION

Install four weight plate sleeve assemblies (#15) on the squat trainer left frame (#7) and squat trainer right frame (#8), and install two lever arm sleeve assemblies (#16) on the standing squat trainer lever arm (#9).

HARDWARE

#17 × 6 Socket head cap screw M10×25	#5 × 6 Spring washer M10	#6 × 6 Flat washer M10-D30

STEP 4

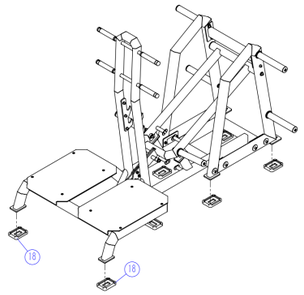

ACTION

Place the standing squat trainer in a suitable position and install the eight foot pads (#18).

FINAL CHECK

01 After assembling the standing squat trainer, check that the equipment is level and upright.

Exploded View

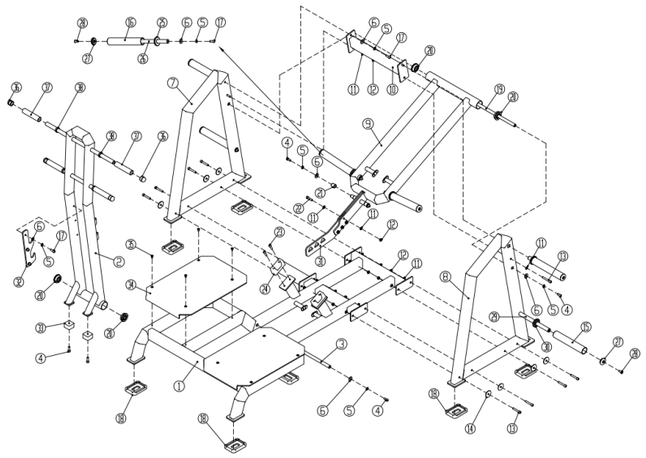

Parts List

NO.	PART / SPECIFICATION	QTY
1	Standing squat trainer base frame	1
2	Standing squat trainer lever arm stop frame	1
3	Shaft 20×350	1
4	Socket head cap screw M10×20	6
5	Spring washer M10	18
6	Flat washer M10-D30	12
7	Squat trainer left frame	1
8	Squat trainer right frame	1
9	Standing squat trainer lever arm	1
10	Lever arm support frame	1
11	Flat washer M10-D20	26
12	Self-locking nut M10	14
13	Socket head cap screw M10×60	10
14	Flat washer M10-D50	8
15	Weight plate sleeve assembly	4
16	Lever arm sleeve assembly	2
17	Socket head cap screw M10×25	12
18	Foot pad	8
19	Shaft 20×582	1
20	Deep groove ball bearing 60	4
21	Adjustment bushing	2
22	Socket head cap screw M10×40	4
23	Socket head cap screw M10×35	4
24	Rectangular stop pad	2
25	Sleeve inner end cap	4
26	Lever arm weight horn	2
27	Universal sleeve end cap A	6
28	Hex socket countersunk flat head screw M10×25	6
29	Universal sleeve shaft	4
30	Universal sleeve end cap B	4
31	Hook plate	1
32	Limit hook plate	2
33	Square stop pad	2
34	Chequered footplate	2
35	Hex socket countersunk flat head screw M8×16	8
36	Handle end cap-33	2
37	Universal handle grip-150	2
38	Grip retaining ring-33	2