82047 · Pro Biceps Curl

INSTALLATION MANUAL

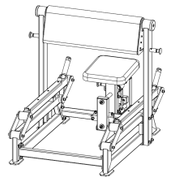

Before Installation

Before You Start

01 Read all instructions before installation. Check all parts and quantities against the packing list. Contact after-sales service immediately if any part is missing or damaged in transit.

02 Assemble the equipment according to the instructions. After assembly, understand all functions before use. Stop using the equipment immediately if a problem occurs. Check the instructions and contact after-sales service if the problem cannot be resolved.

Tools Required

- Rubber Mallet
- Snap-Ring Pliers
- Spirit Level
- Adjustable Wrench
- Hex Keys
- 2 People

Assembly

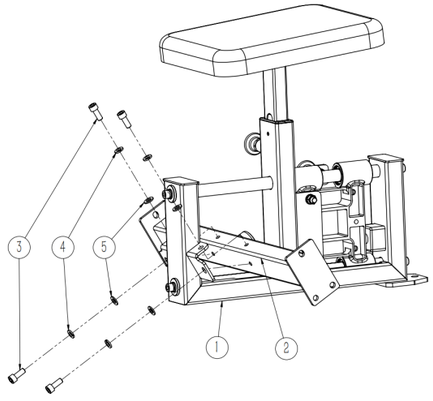

STEP 1

ACTION

Connect the preassembled seat slide assembly (#1) to connecting frame II (#2) with the listed hardware. Tighten the bolts with a wrench before continuing.

HARDWARE

- Socket Head Cap Screw M10×25 (#3) × 4
- Spring Washer M10 (#4) × 4
- Flat Washer M10 (#5) × 4

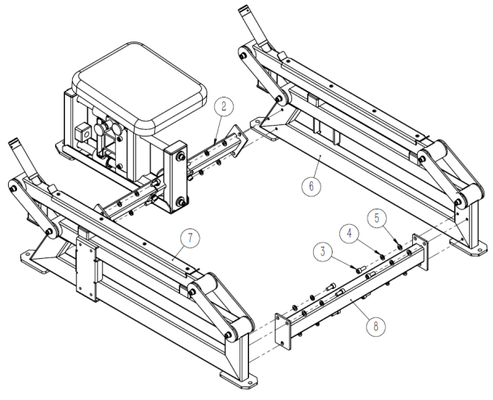

STEP 2

ACTION

Connect the preassembled left side frame assembly (#6) and right side frame assembly (#7) using connecting frame I (#8) and connecting frame II (#2). Secure them with the listed hardware. Tighten the bolts before continuing.

HARDWARE

- Socket Head Cap Screw M10×25 (#3) × 12
- Spring Washer M10 (#4) × 12
- Flat Washer M10 (#5) × 12

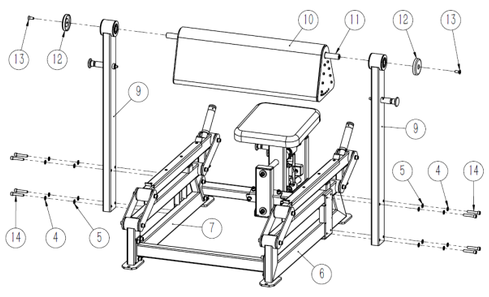

STEP 3

ACTION

Connect the left side frame (#6), right side frame (#7), side frame connectors (#9), pad assembly (#10), and main shaft (#11) with the listed parts and hardware. Tighten the bolts before continuing.

HARDWARE

- 76 Aluminum Cap (#12) × 2
- Hex Socket Countersunk Head Screw M10×25 (#13) × 2
- Socket Head Cap Screw M10×55 (#14) × 8
- Spring Washer M10 (#4) × 8
- Flat Washer M10 (#5) × 8

FINAL CHECK

01 Use a spirit level to check that the machine is level and that the guide rods are plumb in both directions.

02 If the guide rods are not plumb, loosen the required frame hardware, realign the frame, and retighten the bolts.

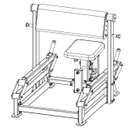

Parts List

Preassembled parts are not listed in this table.

NO.	PART / SPECIFICATION	QTY
1	Seat Slide Assembly	1
2	Connecting Frame II	1
6	Left Side Frame Assembly	1
7	Right Side Frame Assembly	1
8	Connecting Frame I	1

NO.	PART / SPECIFICATION	QTY
9	Side Frame Connector	2
10	Pad Assembly	1
11	Main Shaft	1
12	76 Aluminum Cap	2
3	Socket Head Cap Screw M10×25	16

NO.	PART / SPECIFICATION	QTY
4	Spring Washer M10	24
5	Flat Washer M10	24
13	Hex Socket Countersunk Head Screw M10×25	2
14	Socket Head Cap Screw M10×55	8