G2A03 · 82037 · Lat Pull-Down Circular

INSTALLATION MANUAL



Before Installation

Before You Start

01 Read this manual carefully before installation. Check all parts and quantities against the parts list. If any part is missing or damaged in transit, contact after-sales service immediately. Assemble the equipment according to these instructions.

02 After assembly, familiarize yourself with all functions before use. If a problem occurs during use, stop immediately to prevent injury or equipment damage. Check the instructions and contact after-sales service if the problem cannot be resolved.

Tools Required

- Rubber Mallet
- Spirit Level
- Hex Keys
- Snap-Ring Pliers
- Adjustable Wrench
- 2 People

Assembly

STEP 1

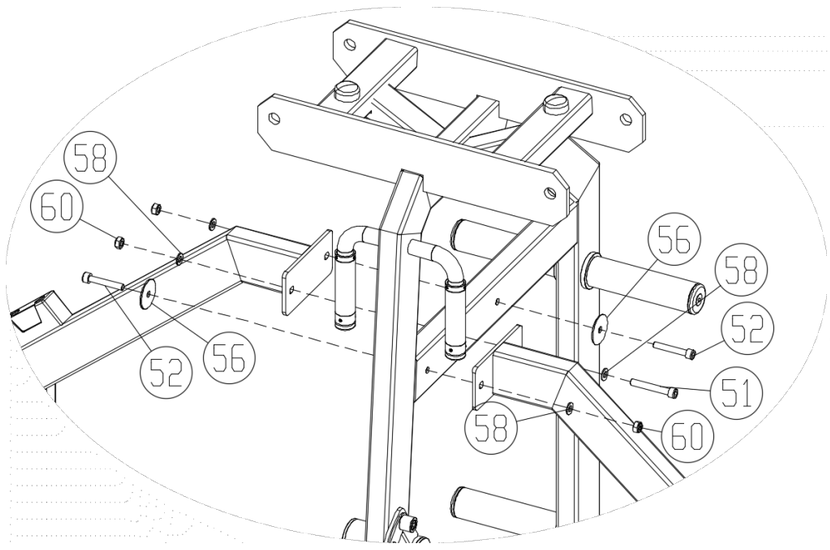

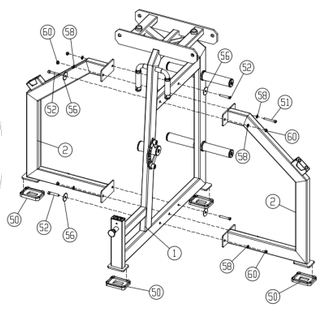

ACTION

Position the two support side frames (#2) on both sides of the main frame assembly (#1) and connect them to the main frame assembly (#1), then install the four rectangular foot pads (#50) on the main frame assembly (#1) and support side frames (#2).

HARDWARE



#3 × 1
Dual-Axis Lat Pull-Down Thigh Pad Assembly



#56 × 4
Flat Washer M10-D50



#50 × 4
Rectangular Foot Pad



#58 × 8
Flat Washer M10-D20



#51 × 2
Socket Head Cap Screw M10×70



#60 × 6
Hex Lock Nut M10



#52 × 4
Socket Head Cap Screw M10×60

Fastener Reference



#51
Socket Head Cap Screw
M10×70



#56
Flat Washer M10-D50



#55
Spring Washer M10



#52
Socket Head Cap Screw
M10×60



#57
Flat Washer M10-D30



#60
Hex Lock Nut M10



#53
Socket Head Cap Screw
M10×35



#58
Flat Washer M10-D20



#54
Socket Head Cap Screw
M10×25



#59
Hex Socket Countersunk
Head Screw M10×25

STEP 2

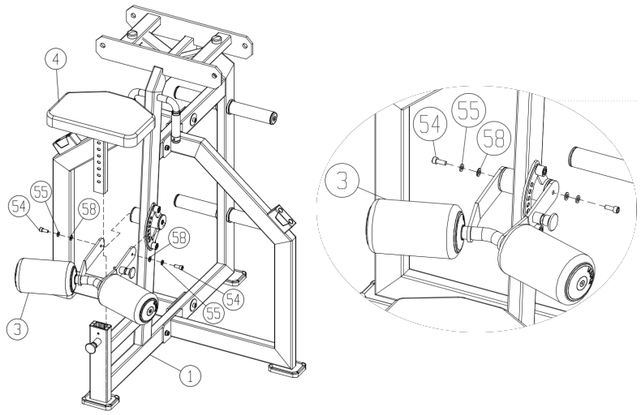

ACTION

Install the seat adjustment assembly (#4) and dual-axis lat pull-down thigh pad assembly (#3) on the main frame assembly (#1).

HARDWARE



#4 × 1
Seat Adjustment Assembly



#3 × 1
Dual-Axis Lat Pull-Down
Thigh Pad Assembly



#54 × 2
Socket Head Cap Screw
M10×25



#55 × 2
Spring Washer M10



#58 × 2
Flat Washer M10-D20

STEP 3

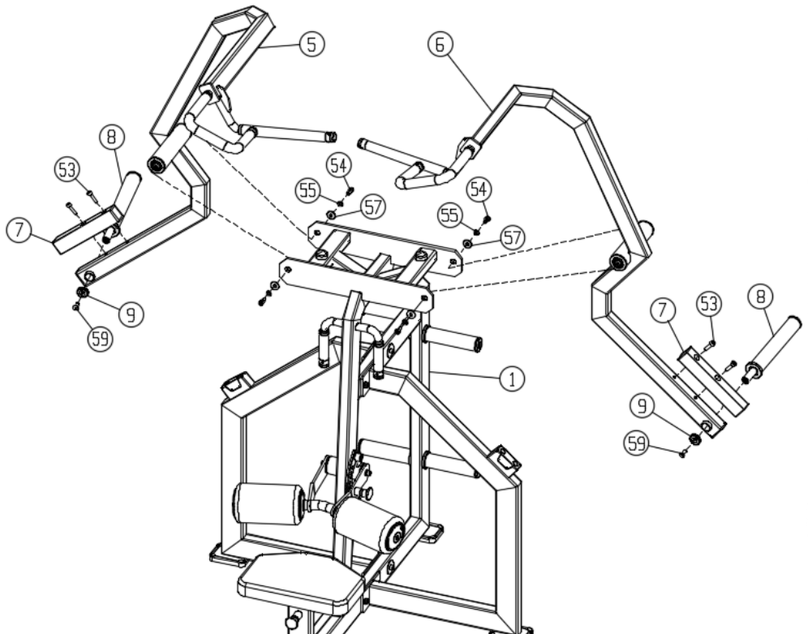

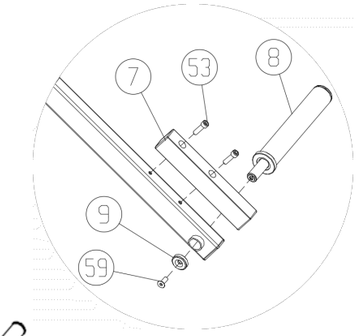

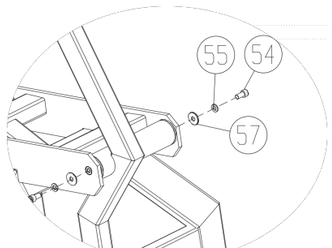

ACTION

Install the two counterweights (#7) on the left lever arm assembly (#5) and right lever arm assembly (#6), install the two lever arm sleeve assemblies (#8) on the left lever arm assembly (#5) and right lever arm assembly (#6) and fit the weight horn locking caps (#9), then install the left lever arm assembly (#5) and right lever arm assembly (#6) on both sides of the main frame assembly (#1).

HARDWARE



#5 × 1
Left Lever Arm Assembly



#53 × 4
Socket Head Cap Screw
M10×35



#6 × 1
Right Lever Arm Assembly



#54 × 4
Socket Head Cap Screw
M10×25



#7 × 2
Counterweight



#59 × 2
Hex Socket Countersunk
Head Screw M10×25



#8 × 2
Lever Arm Sleeve Assembly



#57 × 4
Flat Washer M10-D30



#9 × 2
Weight Horn Locking Cap

FINAL CHECK

01 After assembly, check that the machine is level and vertical.

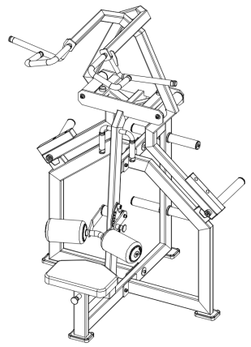

Exploded View

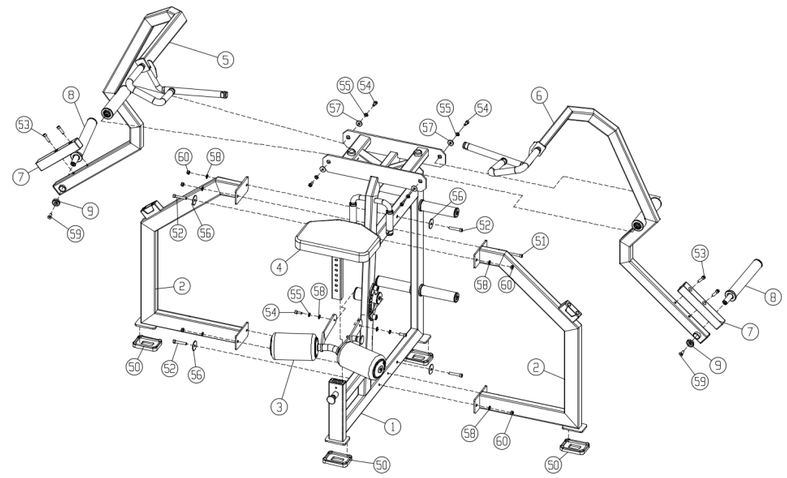

Parts List

NO.	PART / SPECIFICATION	QTY
1	Main Frame Assembly	1
2	Support Side Frame	2
3	Dual-Axis Lat Pull-Down Thigh Pad Assembly	1
4	Seat Adjustment Assembly	1
5	Left Lever Arm Assembly	1
6	Right Lever Arm Assembly	1
7	Counterweight	2
8	Lever Arm Sleeve Assembly	2
9	Weight Horn Locking Cap	2
50	Rectangular Foot Pad	5
51	Socket Head Cap Screw M10×70	2
52	Socket Head Cap Screw M10×60	4
53	Socket Head Cap Screw M10×35	4
54	Socket Head Cap Screw M10×25	6
55	Spring Washer M10	6
56	Flat Washer M10-D50	4
57	Flat Washer M10-D30	4
58	Flat Washer M10-D20	10
59	Hex Socket Countersunk Head Screw M10×25	2
60	Hex Lock Nut M10	6