82029 · Ground Base Squat Lunge

INSTALLATION MANUAL

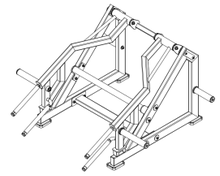

Before Installation

Before You Start

01 Read these instructions carefully before installation. Check all parts against the lists for completeness and correct quantities. If any parts are missing or damaged during transport, contact after-sales service immediately. Assemble the equipment according to these instructions.

Tools Required

- Rubber Mallet
- Spirit Level
- Hex Keys
- Snap-Ring Pliers
- Adjustable Wrench
- 2 People

Fastener Reference


#51
Hex socket head cap screw M10×60


#53
Flat washer M10-D50


#56
Spring washer M10


#52
Hex socket head cap screw M10×20


#54
Flat washer M10-D30


#57
Hex lock nut M10


#55
Flat washer M10-D20

Assembly

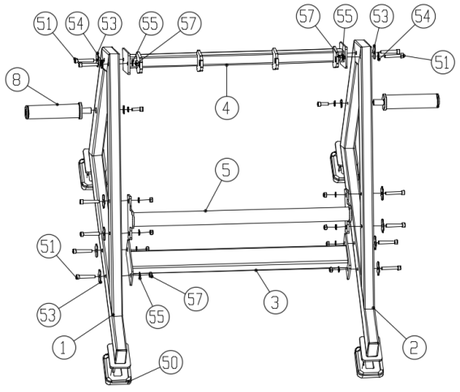

STEP 1

ACTION

Connect the left frame (#1) and right frame (#2) with the lower connecting frame (#3), lever arm support frame (#4), and straddle bar (#5); install two weight plate storage horn assemblies (#8) on the left frame (#1) and right frame (#2), and install four rectangular foot pads (#50) on the left frame (#1) and right frame (#2).

HARDWARE


Lower connecting frame (#3) × 1


Lever arm support frame (#4) × 1


Straddle bar (#5) × 1


Weight plate storage horn assembly (#8) × 2


Rectangular foot pad (#50) × 4


Hex socket head cap screw M10×60 (#51) × 12


Flat washer M10-D50 (#53) × 10


Flat washer M10-D30 (#54) × 2


Flat washer M10-D20 (#55) × 12


Hex lock nut M10 (#57) × 12

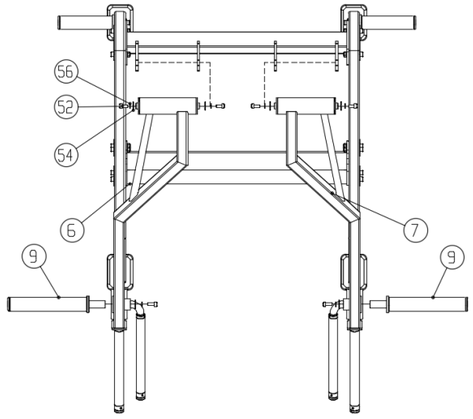

STEP 2

ACTION

Install the left lever arm assembly (#6) and right lever arm assembly (#7) on the left frame (#1) and right frame (#2), then install two lever arm sleeve assemblies (#9) on the left frame (#1) and right frame (#2).

HARDWARE

Left lever arm assembly (#6) × 1


Hex socket head cap screw M10×20 (#52) × 4


Spring washer M10 (#56) × 4

Right lever arm assembly (#7) × 1


Flat washer M10-D30 (#54) × 4

FINAL CHECK

01 The squat lunge machine is now fully assembled. Check that the equipment is level and plumb.

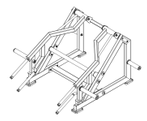

Parts List

NO.	PART / SPECIFICATION	QTY
1	Left frame	1
2	Right frame	1
3	Lower connecting frame	1
4	Lever arm support frame	1
5	Straddle bar	1
6	Left lever arm assembly	1
7	Right lever arm assembly	1
8	Weight plate storage horn assembly	2
9	Lever arm sleeve assembly	2
50	Rectangular foot pad	4
51	Hex socket head cap screw M10×60	12
52	Hex socket head cap screw M10×20	4
53	Flat washer M10-D50	10
54	Flat washer M10-D30	6
55	Flat washer M10-D20	12
56	Spring washer M10	4
57	Hex lock nut M10	12

Exploded View

