82027 · Seated Shrug

INSTALLATION MANUAL

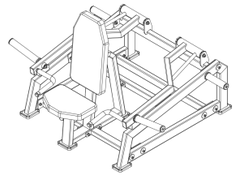

Before Installation

Before You Start

01 Read this manual carefully before assembly. Check all parts and quantities against the parts list. Contact after-sales service immediately if any parts are missing or damaged in transit.

02 Assemble the machine according to these instructions.

Tools Required

- Rubber Mallet
- Spirit Level
- Hex Keys
- Snap-Ring Pliers
- Adjustable Wrench
- 2 People

Assembly Notes

After assembly, understand all machine functions before use. Stop using the machine immediately if a problem occurs to prevent injury or equipment damage. Check the instructions and contact after-sales service if the problem cannot be resolved.

Assembly

STEP 1 & 2

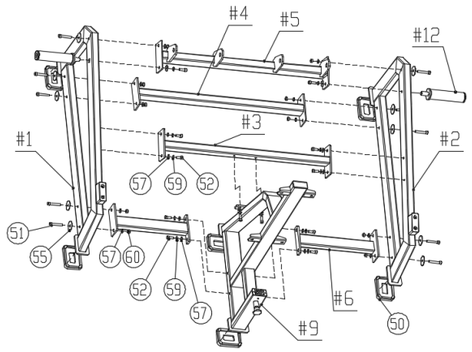

STEP 1
Connect #1, #2, #3, #4, #5, #6, #9, and #12 to form #BCP1.

HARDWARE

- Hex Socket Head Cap Screw M10×60 (#51) × 10
- Flat Washer M10-D50 (#55) × 10
- Flat Washer M10-D20 (#57) × 10
- Self-Locking Hex Nut M10 (#60) × 10
- Hex Socket Head Cap Screw M10×25 (#52) × 8
- Spring Washer M10 (#59) × 8
- Flat Washer M10-D20 (#57) × 8

STEP 2
Install six rectangular foot pads (#50) on #BCP1.

HARDWARE

- Rectangular Foot Pad (#50) × 6

STEP 3

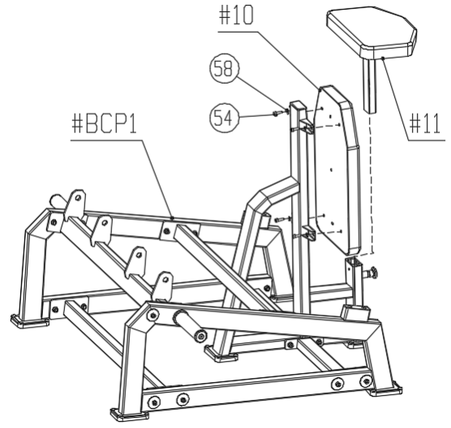

ACTION
Connect #10 and #11 to #BCP1 to form #BCP2.

HARDWARE

- Hex Socket Head Cap Screw M8×25 (#54) × 4
- Flat Washer M8-D16 (#58) × 4

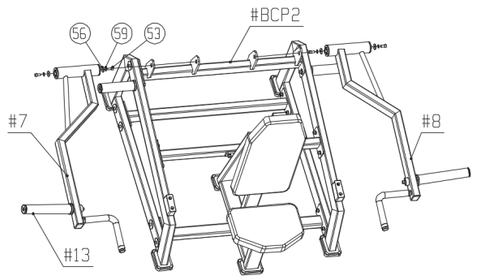

STEP 4

ACTION
Connect #7, #8, and #13 to #BCP2.

HARDWARE
- Hex Socket Head Cap Screw M10×20 (#53) × 4
- Spring Washer M10 (#59) × 4
- Flat Washer M10-D30 (#56) × 4

FINAL CHECK

01 Check that the assembled Seated Shrug is level and plumb.

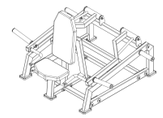

Parts List

Pre-assembled parts are not included in this list.

NO.	PART / SPECIFICATION	QTY
1	#1	1
2	#2	1
3	#3	1
4	#4	1
5	#5	1
6	#6	2
7	#7	1
8	#8	1

NO.	PART / SPECIFICATION	QTY
9	#9	1
10	#10	1
11	#11	1
12	#12	2
13	#13	2
50	Rectangular Foot Pad	6
51	Hex Socket Head Cap Screw M10×60	10
52	Hex Socket Head Cap Screw M10×25	8

NO.	PART / SPECIFICATION	QTY
53	Hex Socket Head Cap Screw M10×20	4
54	Hex Socket Head Cap Screw M8×25	4
55	Flat Washer M10-D50	10
56	Flat Washer M10-D30	4
57	Flat Washer M10-D20	18
58	Flat Washer M8-D16	4
59	Spring Washer M10	12
60	Self-Locking Hex Nut M10	10