82022 · Leg Press

INSTALLATION MANUAL

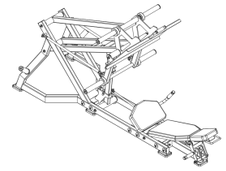

Before Installation

Before You Start

01 Read this manual carefully before assembly. Check all parts and quantities against the parts list. Contact after-sales service immediately if any parts are missing or damaged in transit.

02 Assemble the machine according to these instructions.

Tools Required

- Rubber Mallet
- Spirit Level
- Hex Keys
- Snap-Ring Pliers
- Adjustable Wrench
- 2 People

Assembly Notes

After assembly, understand all machine functions before use. Stop using the machine immediately if a problem occurs to prevent injury or equipment damage. Check the instructions and contact after-sales service if the problem cannot be resolved.

Assembly

STEP 1 & 2

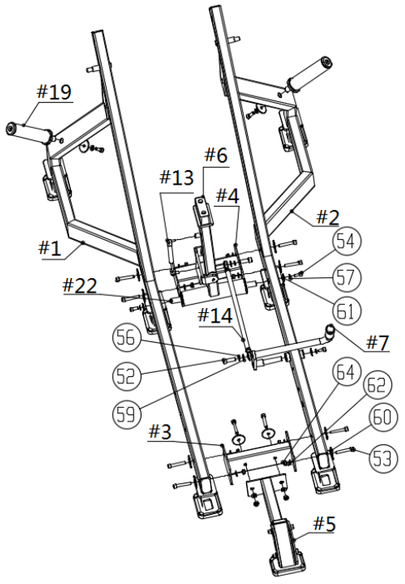

STEP 1
Connect #1, #2, #3, #4, #5, #6, #7, #13, #14, #19, and #22 to form #BCP1.

HARDWARE
- Hex Socket Head Cap Screw M10×60 (#53) × 10
- Flat Washer M10-D50 (#60) × 10
- Flat Washer M10-D20 (#62) × 10
- Self-Locking Hex Nut M10 (#64) × 10
- Hex Socket Head Cap Screw M10×20 (#54) × 3
- Flat Washer M10-D30 (#61) × 3
- Spring Washer M10 (#57) × 3
- Hex Socket Head Cap Screw M12×35 (#54) × 2
- Flat Washer M12-D24 (#59) × 2
- Spring Washer M12 (#56) × 2

STEP 2
Install seven rectangular foot pads (#50) onto #BCP1.

HARDWARE
- Rectangular Foot Pad (#50) × 7

STEP 3 & 4

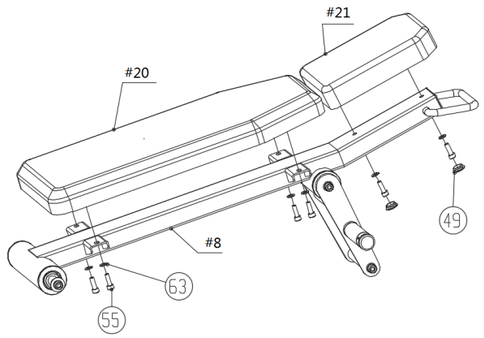

STEP 3
Connect #8, #20, and #21 to form #BCP2.

HARDWARE
- Hex Socket Head Cap Screw M8×25 (#55) × 6
- Flat Washer M8-D16 (#63) × 6

STEP 4
Install two 20 plugs (#49) onto #BCP2.

HARDWARE
- 20 Plug (#49) × 2

STEP 5

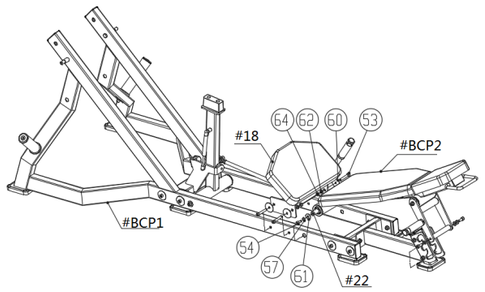

ACTION
Connect #18, #22, #BCP1, and #BCP2 to form #BCP3.

HARDWARE
- Hex Socket Head Cap Screw M10×60 (#53) × 4
- Flat Washer M10-D50 (#60) × 4
- Flat Washer M10-D20 (#62) × 4
- Self-Locking Hex Nut M10 (#64) × 4
- Hex Socket Head Cap Screw M10×20 (#54) × 2
- Flat Washer M10-D30 (#61) × 2
- Spring Washer M10 (#57) × 2

STEP 6

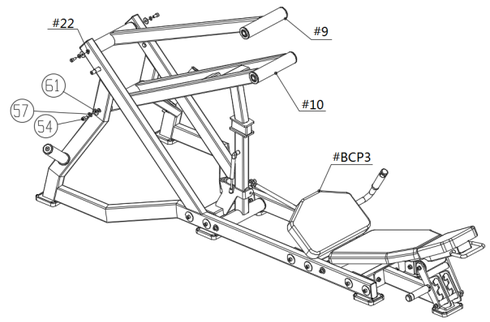

ACTION
Connect #9, #10, #22, and #BCP3 to form #BCP4.

HARDWARE
- Hex Socket Head Cap Screw M10×20 (#54) × 4
- Flat Washer M10-D30 (#61) × 4
- Spring Washer M10 (#57) × 4

STEP 7

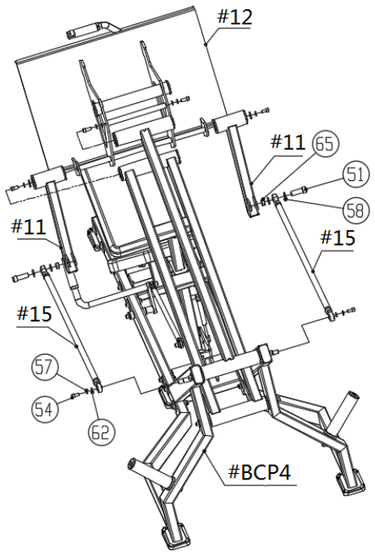

ACTION
Connect #11, #12, #15, and #BCP4 to form #BCP5.

HARDWARE
- Hex Socket Head Cap Screw M16×50 (#51) × 2
- Flat Washer M16-D30 (#58) × 4
- Self-Locking Hex Nut M16 (#65) × 2
- Hex Socket Head Cap Screw M10×20 (#54) × 2
- Spring Washer M10 (#57) × 2
- Flat Washer M10-D20 (#62) × 2

STEP 8

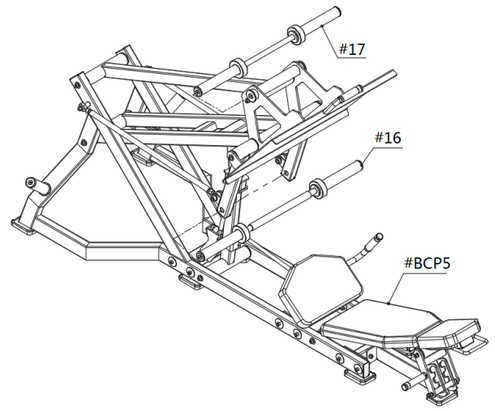

ACTION
Connect #BCP5, #16, and #17.

FINAL CHECK

01 Check that the assembled Leg Press is level and vertical.



Parts List

Pre-assembled parts are not included in this list.

NO.	PART / SPECIFICATION	QTY
1	#1	1
2	#2	1
3	#3	1
4	#4	1
5	#5	1
6	#6	1
7	#7	1
8	#8	1
9	#9	1
10	#10	1
11	#11	2
12	#12	1
13	#13	1

NO.	PART / SPECIFICATION	QTY
14	#14	1
15	#15	2
16	#16	1
17	#17	1
18	#18	1
19	#19	2
20	#20	1
21	#21	1
22	#22	4
49	20 Plug	2
50	Rectangular Foot Pad	7
51	Hex Socket Head Cap Screw M16×50	2
52	Hex Socket Head Cap Screw M12×35	2

NO.	PART / SPECIFICATION	QTY
53	Hex Socket Head Cap Screw M10×60	14
54	Hex Socket Head Cap Screw M10×20	11
55	Hex Socket Head Cap Screw M8×25	16
56	Spring Washer M12	2
57	Spring Washer M10	11
58	Flat Washer M16-D30	4
59	Flat Washer M12-D24	2
60	Flat Washer M10-D50	14
61	Flat Washer M10-D30	9
62	Flat Washer M10-D20	16
63	Flat Washer M8-D16	6
64	Self-Locking Hex Nut M10	14
65	Self-Locking Hex Nut M16	2