82019 · Standing Calf Machine

INSTALLATION MANUAL

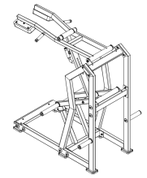

Before Installation

Before You Start

01 Read this manual carefully before assembly. Check all parts and quantities against the parts list. Contact after-sales service immediately if any parts are missing or damaged in transit.

02 Assemble the machine according to these instructions.

Tools Required

- Rubber Mallet
- Spirit Level
- Hex Keys
- Snap-Ring Pliers
- Adjustable Wrench
- 2 People

Assembly Notes

After assembly, understand all machine functions before use. Stop using the machine immediately if a problem occurs to prevent injury or equipment damage. Check the instructions and contact after-sales service if the problem cannot be resolved.

Assembly

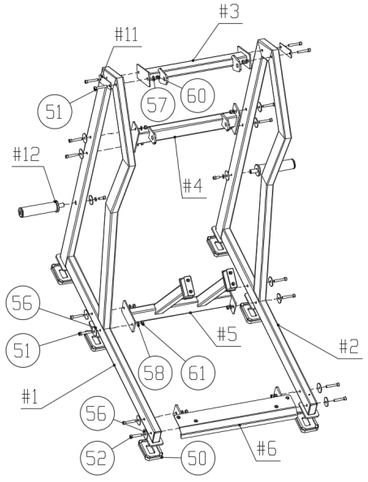

STEP 1 & 2

STEP 1
Connect #1, #2, #3, #4, #5, #6, #11, and #12 to form #BCP1.

HARDWARE
- Hex Socket Head Cap Screw M10×60 (#51) × 14
- Hex Socket Head Cap Screw M10×55 (#52) × 2
- Flat Washer M10-D50 (#55) × 12
- Flat Washer M10-D20 (#57) × 14
- Self-Locking Hex Nut M10 (#60) × 14

STEP 2
Install six rectangular foot pads (#50) onto #BCP1.

HARDWARE
- Rectangular Foot Pad (#50) × 6

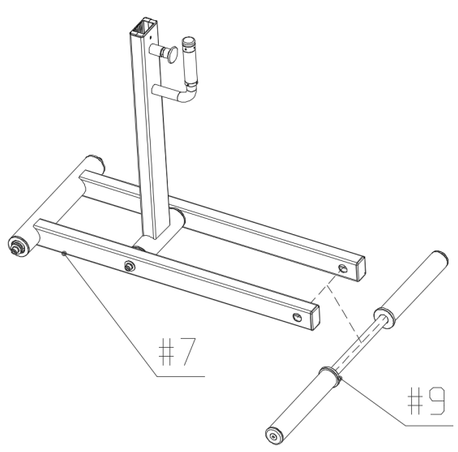

STEP 3

ACTION
Connect #7 and #9 to form #BCP2.

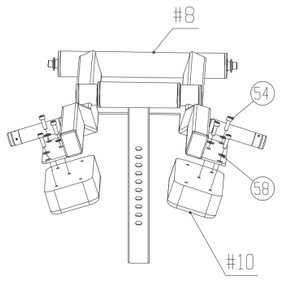

STEP 4

ACTION
Connect #8 and #10 to form #BCP3.

HARDWARE
- Hex Socket Head Cap Screw M8×25 (#54) × 6
- Flat Washer M8-D16 (#58) × 6

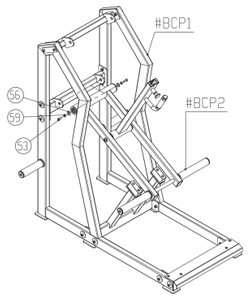

STEP 5

ACTION
Connect #BCP1 and #BCP2 to form #BCP4.

HARDWARE
- Hex Socket Head Cap Screw M10×20 (#53) × 2
- Spring Washer M10 (#59) × 2
- Flat Washer M10-D30 (#56) × 2

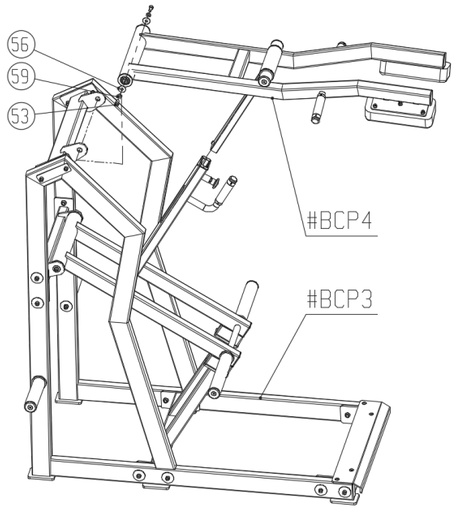

STEP 6

ACTION
Connect #BCP3 and #BCP4.

HARDWARE
- Hex Socket Head Cap Screw M10×20 (#53) × 2
- Spring Washer M10 (#59) × 2
- Flat Washer M10-D30 (#56) × 2

FINAL CHECK

01 Check that the assembled Standing Calf Machine is level and vertical.



Parts List

Pre-assembled parts are not included in this list.

NO.	PART / SPECIFICATION	QTY	NO.	PART / SPECIFICATION	QTY	NO.	PART / SPECIFICATION	QTY
1	#1	1	9	#9	1	54	Hex Socket Head Cap Screw M8×25	6
2	#2	1	10	#10	1	55	Flat Washer M10-D50	12
3	#3	1	11	#11	2	56	Flat Washer M10-D30	4
4	#4	1	12	#12	2	57	Flat Washer M10-D20	14
5	#5	1	50	Rectangular Foot Pad	6	58	Flat Washer M8-D16	6
6	#6	1	51	Hex Socket Head Cap Screw M10×60	14	59	Spring Washer M10	4
7	#7	1	52	Hex Socket Head Cap Screw M10×55	2	60	Self-Locking Hex Nut M10	14
8	#8	1	53	Hex Socket Head Cap Screw M10×20	4			