82002 · Plate-Loaded ISO-Lateral Shoulder Press

INSTALLATION MANUAL

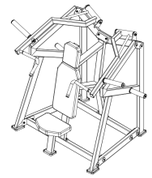

Before Installation

Before You Start

01 Read all instructions before installation. Check all parts and quantities against the parts list. Contact after-sales service immediately if any part is missing or damaged in transit.

02 Assemble the equipment according to the instructions. After assembly, understand all functions before use. Stop using the equipment immediately if a problem occurs. Check the instructions and contact after-sales service if the problem cannot be resolved.

Tools Required

- Rubber Mallet
- Snap-Ring Pliers
- Spirit Level
- Adjustable Wrench
- Hex Keys
- 2 People

Assembly

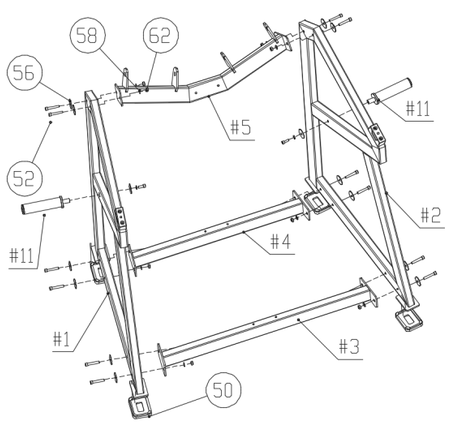

STEP 1 & 2

STEP 1
Connect #1, #2, #3, #4, #5, and #11 with the listed hardware to form #BCP1.

HARDWARE
- Socket Head Cap Screw M10×60 (#52) × 12
- Flat Washer M10-D50 (#56) × 12
- Flat Washer M10-D20 (#58) × 12
- Self-Locking Hex Nut M10 (#62) × 12

STEP 2
Install four rectangular foot pads (#50) on #BCP1.

HARDWARE
- Rectangular Foot Pad (#50) × 4

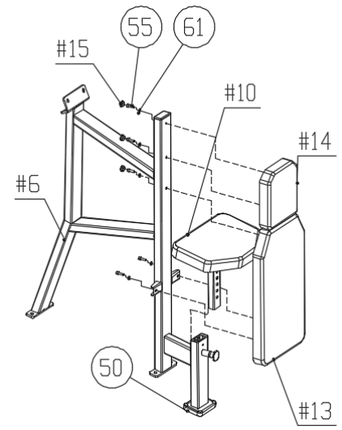

STEP 3 & 4

STEP 3
Connect #6, #10, #13, #14, and #15 with the listed hardware to form #BCP2.

HARDWARE
- Socket Head Cap Screw M8×25 (#59) × 5
- Flat Washer M8-D16 (#61) × 5

STEP 4
Install one rectangular foot pad (#50) on #BCP2.

HARDWARE
- Rectangular Foot Pad (#50) × 1

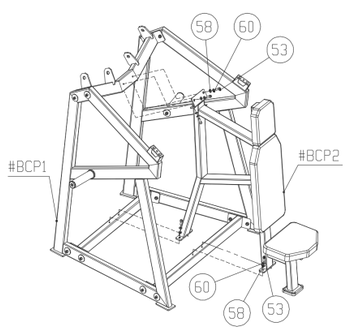

STEP 5

ACTION
Connect #BCP1 and #BCP2 with the listed hardware to form #BCP3.

HARDWARE
- Socket Head Cap Screw M10×25 (#53) × 8
- Spring Washer M10 (#60) × 8
- Flat Washer M10-D20 (#58) × 8

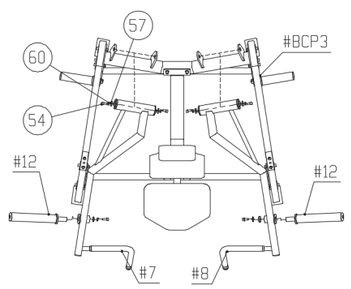

STEP 6

ACTION
Connect #7, #8, #12, and #BCP3 with the listed hardware.

HARDWARE
- Socket Head Cap Screw M10×20 (#54) × 4
- Spring Washer M10 (#60) × 4
- Flat Washer M10-D30 (#57) × 4

FINAL CHECK

01 Check that the assembled machine is level and vertical.



Parts List

Preassembled parts are not listed in this table.

NO.	PART / SPECIFICATION	QTY
1	#1	1
2	#2	1
3	#3	1
4	#4	1
5	#5	1
6	#6	1
7	#7	1
8	#8	1
10	#10	1

NO.	PART / SPECIFICATION	QTY
11	#11	2
12	#12	2
13	#13	1
14	#14	1
15	#15	2
50	Rectangular Foot Pad	5
52	Socket Head Cap Screw M10×60	12
53	Socket Head Cap Screw M10×25	8
54	Socket Head Cap Screw M10×20	4

NO.	PART / SPECIFICATION	QTY
55	Hex Socket Countersunk Head Screw M8×25	5
56	Flat Washer M10-D50	12
57	Flat Washer M10-D30	4
58	Flat Washer M10-D20	20
59	Flat Washer M8-D16	5
60	Spring Washer M10	12
62	Self-Locking Hex Nut M10	12