7318A · Lower Abdominal Trainer

INSTALLATION MANUAL

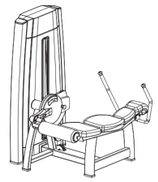

Before Installation

Before You Start

01 Read this manual before installation and check all packaged components against the parts list.

02 If any part is missing or damaged, contact customer service before installation.

Tools Required

- Rubber Mallet
- Spirit Level
- Hex Keys
- Snap-Ring Pliers
- Adjustable Wrench
- 2 People

Assembly Notes

After assembly, review all functions before use. If a problem occurs, recheck the installation steps. If the problem remains, contact an authorized distributor and provide the product code and manual.

Assembly

STEP 1

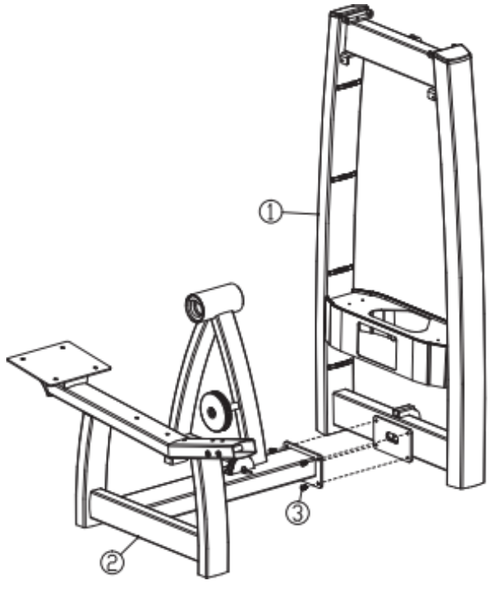

ACTION

Connect the weight stack frame (#1) to the main frame (#2) and secure it with five M10×16 button head hex socket screws (#3).

HARDWARE

- Weight Stack Frame (#1) × 1
- Main Frame (#2) × 1
- Button Head Hex Socket Screws (M10×16) (#3) × 5

STEP 2

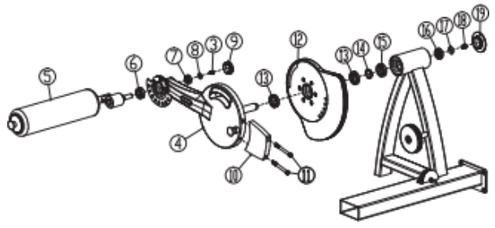

ACTION

Assemble the force arm (#4) and related pivot, bearing, flange, counterweight and cover components (#5-#19) in the order shown.

HARDWARE

- Force Arm (#4) × 1
- Upholstered Roller Pivot Assembly (#5) × 1
- Deep Groove Ball Bearing 6205 (#6) × 1
- Deep Groove Ball Bearing 6004 (#7) × 1
- M10 Large Washer (#8) × 1
- 60 Aluminum Cover (#9) × 1
- Counterweight (#10) × 1
- Hex Socket Countersunk Head Screws (M12×100) (#11) × 2
- Flange (#12) × 1
- Deep Groove Ball Bearing 61908 (#13) × 2
- Bearing Isolation Pad (#14) × 1
- Deep Groove Ball Bearing 6007 (#15) × 1
- Deep Groove Ball Bearing 6028 (#16) × 1
- M12 Large Washer (#17) × 1
- Button Head Hex Socket Screw (M12×20) (#18) × 1
- 100 End Cover (#19) × 1

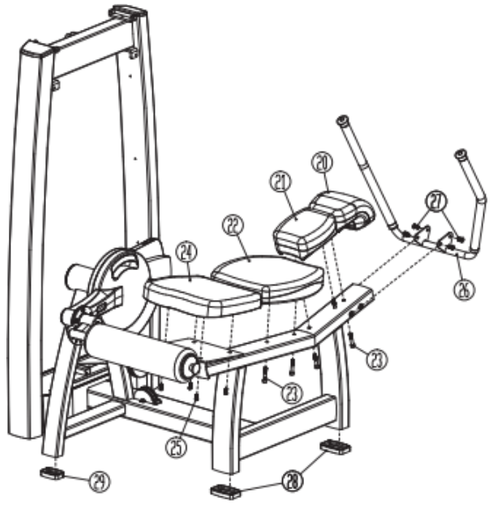

STEP 3

ACTION
Install the head, middle, back and seat pads (#20-#24), handrail (#26) and foot pads (#28, #29). Secure them with the specified screws (#23, #25, #27).

HARDWARE

- Head Pad (#20) × 1
- Middle Pad (#21) × 1
- Back Pad (#22) × 1
- Hex Socket Head Cap Screws (M10×50) (#23) × 5
- Seat Pad (#24) × 1
- Button Head Hex Socket Screws (M8×20) (#25) × 4
- Handrail (#26) × 1
- Button Head Hex Socket Screws (M10×20) (#27) × 4
- 58×10 1 Foot Pad (#28) × 2
- 48×76 Foot Pad (#29) × 1

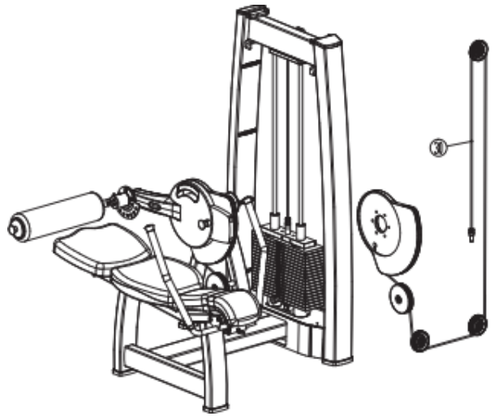

STEP 4

ACTION
Route and install the cable (#30) as shown.

HARDWARE

- Cable (#30) × 1

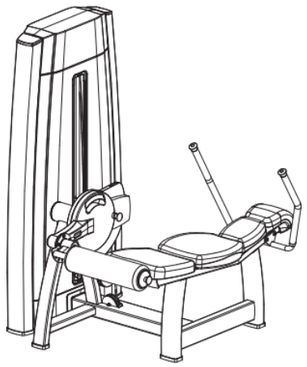

STEP 5

ACTION
Install the covers as shown.

FINAL CHECK

01 After assembly, make sure the machine is square and vertical. Use a spirit level to check the guide bar in two directions. If it is not vertical, loosen the vertical-frame hardware, realign the frame, and retighten the bolts.



Parts List

Some preassembled spare parts are not included in this list.

NO.	PART / SPECIFICATION	QTY
1	Weight Stack Frame	1
2	Main Frame	1
3	Button Head Hex Socket Screws (M10×16)	5
4	Force Arm	1
5	Upholstered Roller Pivot Assembly	1
6	Deep Groove Ball Bearing 6205	1
7	Deep Groove Ball Bearing 6004	1
8	M10 Large Washer	1
9	60 Aluminum Cover	1
10	Counterweight	1
11	Hex Socket Countersunk Head Screws (M12×100)	2
12	Flange	1
13	Deep Groove Ball Bearing 61908	2
14	Bearing Isolation Pad	1
15	Deep Groove Ball Bearing 6007	1
16	Deep Groove Ball Bearing 6028	1
17	M12 Large Washer	1
18	Button Head Hex Socket Screw (M12×20)	1
19	100 End Cover	1
20	Head Pad	1
21	Middle Pad	1
22	Back Pad	1
23	Hex Socket Head Cap Screws (M10×50)	5
24	Seat Pad	1
25	Button Head Hex Socket Screws (M8×20)	4
26	Handrail	1
27	Button Head Hex Socket Screws (M10×20)	4
28	58×10 1 Foot Pad	2
29	48×76 Foot Pad	1
30	Cable	1