61A01A · Shoulder Press Converging

INSTALLATION MANUAL

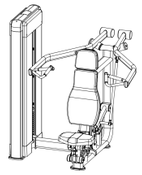

Before Installation

Before You Start

01 Read these instructions carefully before installation. Check the parts list to confirm that all parts and quantities are complete. If any part is missing or damaged in transit, contact after-sales service immediately. Assemble the equipment according to these instructions.

02 After assembly, learn all functions before use. Stop using the equipment immediately if any problem occurs to avoid injury or equipment damage. Check these instructions for the cause; if the problem cannot be resolved, contact after-sales service.

Tools Required

- Rubber Mallet
- Spirit Level
- Hex Keys
- Snap-Ring Pliers
- Adjustable Wrench
- 2 People

Assembly

STEP 1

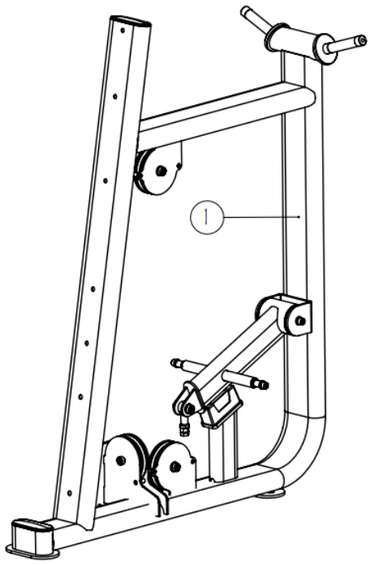

ACTION
Position the converging shoulder press side frame assembly (#1).

HARDWARE
- Converging shoulder press side frame assembly (#1) × 1

STEP 2 & 3

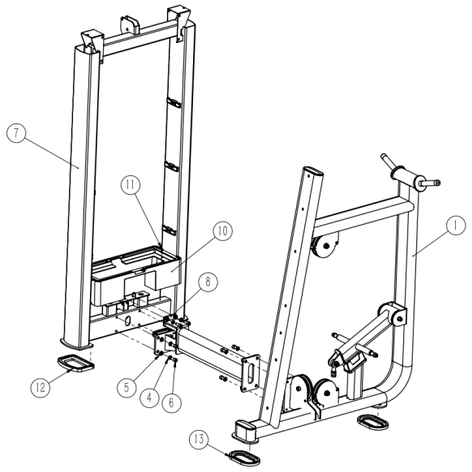

STEP 2
Install the foot pads (#13) on the side frame assembly (#1) and the weight stack frame foot pad (#12) on the weight stack frame (#7). Connect the weight stack frame (#7) and lower shroud (#10) with the M5×15 socket head cap screws (#11).

HARDWARE
- Foot pad (#13) × 2
- Converging shoulder press side frame assembly (#1) × 1
- Weight stack frame foot pad (#12) × 1
- Weight stack frame (#7) × 1
- Lower shroud (#10) × 1
- Socket head cap screw M5×15 (#11) × 2

STEP 3
Connect the side frame assembly (#1), connecting frame (#8), and weight stack frame (#7) with the M10×25 socket head cap screws (#6), M10 spring washers (#4), and M10 flat washers (#5).

HARDWARE
- Converging shoulder press side frame assembly (#1) × 1
- Connecting frame (#8) × 1
- Weight stack frame (#7) × 1
- Socket head cap screw M10×25 (#6) × 10
- Spring washer M10 (#4) × 10
- Flat washer M10 (#5) × 10

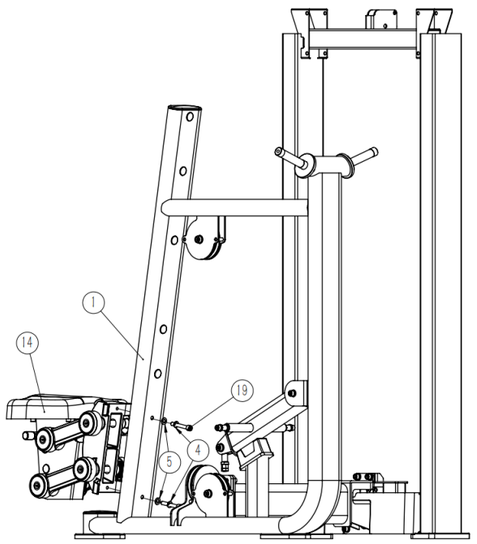

STEP 4

ACTION

Connect the seat frame assembly (#14) to the side frame assembly (#1) with the M10×70 socket head cap screws (#19), M10 spring washers (#4), and M10 flat washers (#5).

HARDWARE

- Converging shoulder press side frame assembly (#1) × 1
- Seat frame assembly (#14) × 1
- Socket head cap screw M10×70 (#19) × 2
- Spring washer M10 (#4) × 2
- Flat washer M10 (#5) × 2

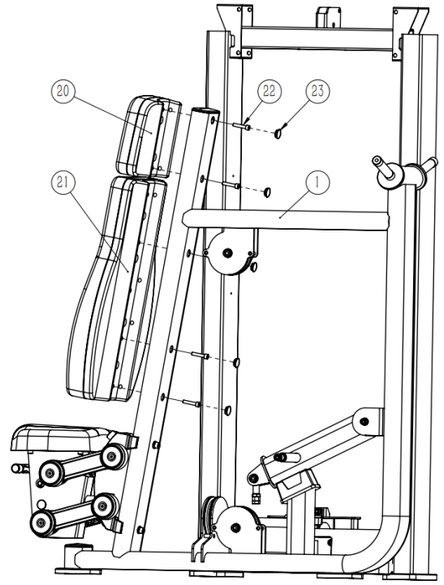

STEP 5 & 6

STEP 5

Attach the head pad (#20) and back pad (#21) to the side frame assembly (#1) with the M8×40 socket head cap screws (#22).

HARDWARE

- Head pad (#20) × 1
- Back pad (#21) × 1
- Converging shoulder press side frame assembly (#1) × 1
- Socket head cap screw M8×40 (#22) × 5

STEP 6

Install the hole plugs (#23) in the corresponding holes on the side frame assembly (#1).

HARDWARE

- Hole plug (#23) × 5
- Converging shoulder press side frame assembly (#1) × 1

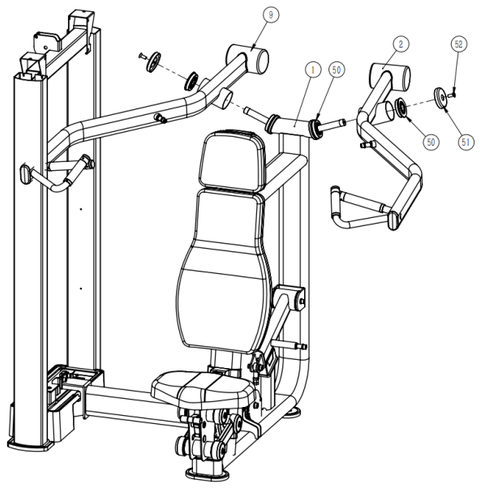

STEP 7

ACTION

Connect the right movement arm (#2) and left movement arm (#9) to the side frame assembly (#1) using the Ø76 deep groove ball bearings (#50), Ø80×16 aluminum caps (#51), and M8×25 hex socket flat countersunk head screws (#52). Install both sides symmetrically.

HARDWARE

- Right movement arm (#2) × 1
- Left movement arm (#9) × 1
- Converging shoulder press side frame assembly (#1) × 1
- Deep groove ball bearing Ø76 (#50) × 4
- Aluminum cap Ø80×16 (#51) × 2
- Hex socket flat countersunk head screw M8×25 (#52) × 2

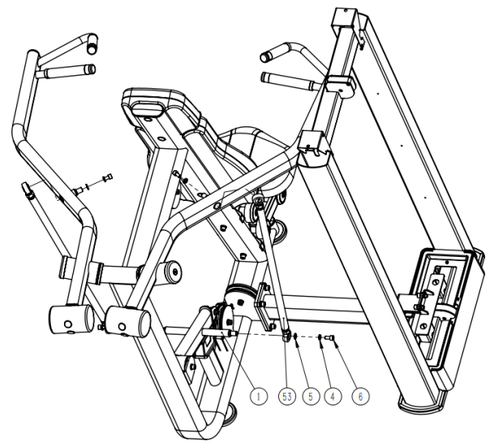

STEP 8

ACTION

Connect the side frame assembly (#1), right movement arm (#2), and left movement arm (#9) with the linkage connecting rods (#53). Secure with the M10×25 socket head cap screws (#6), M10 spring washers (#4), and M10 flat washers (#5).

HARDWARE

- Converging shoulder press side frame assembly (#1) × 1
- Right movement arm (#2) × 1
- Left movement arm (#9) × 1
- Linkage connecting rod (#53) × 2
- Socket head cap screw M10×25 (#6) × 4
- Spring washer M10 (#4) × 4
- Flat washer M10 (#5) × 4

STEP 9 & 10

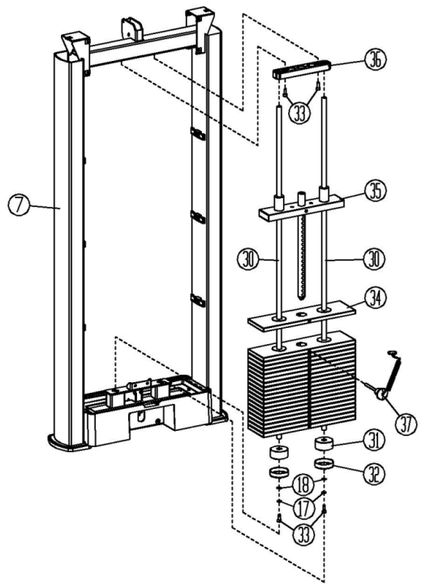

STEP 9

Slide two weight stack rubber pads (#31) onto the two guide rods (#30). Connect the two weight stack bases (#32) to the guide rods and place them in the weight stack frame (#7). Secure with the M8×20 socket head cap screws (#33), M8 spring washers (#17), and M8 flat washers (#18). Tighten the bolts with a wrench before proceeding.

HARDWARE

- Weight stack rubber pad (#31) × 2
- Guide rod (#30) × 2
- Weight stack base (#32) × 2
- Weight stack frame (#7) × 1
- Socket head cap screw M8×20 (#33) × 2
- Spring washer M8 (#17) × 2
- Flat washer M8 (#18) × 2

STEP 10

Install the weight plates (#34) on the guide rods (#30) with the spacers facing up. Install the guide block assembly (#35), insert the weight stack selector pin (#37), and install the guide rod mounting plate (#36). Secure the mounting plate to the weight stack frame (#7) with the M8×20 socket head cap screws (#33). Tighten the bolts with a wrench before proceeding.

HARDWARE

- Weight plate (#34)
- Guide rod (#30) × 2
- Guide block assembly (#35) × 1
- Weight stack selector pin (#37) × 1
- Guide rod mounting plate (#36) × 1
- Weight stack frame (#7) × 1
- Socket head cap screw M8×20 (#33) × 2

STEP 11

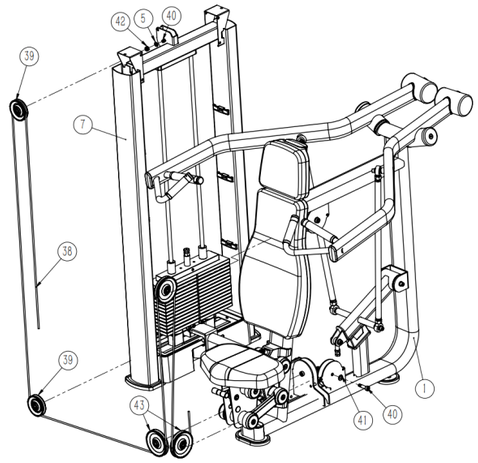

ACTION

Temporarily remove the two 95 pulleys (#39) and three 120 pulleys (#43). Route the cable (#38) around the pulleys and reinstall them in their original positions using four 32 pulley axles (#40), five M10 flat washers (#5), five M10 hex lock nuts (#42), and three M12 flat washers (#41).

HARDWARE

- 95 pulley (#39) × 2
- 120 pulley (#43) × 3
- Cable (#38) × 1
- 32 pulley axle (#40) × 4
- Flat washer M10 (#5) × 5
- Hex lock nut M10 (#42) × 5
- Flat washer M12 (#41) × 3

STEP 12 & 13

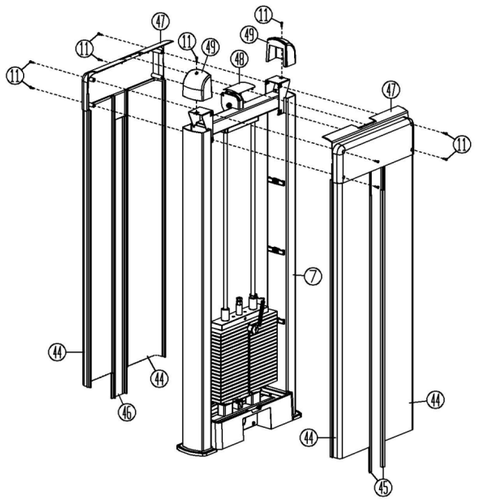

STEP 12

Slide the two decorative strips (#45) into the two shroud panels (#44) and secure them to the weight stack frame (#7) with the shroud pressure plates. Slide the decorative panel (#46) into the shroud panels. Attach the two upper shrouds (#47) to the weight stack frame with eight M5×16 socket head cap screws (#11).

HARDWARE

- Decorative strip (#45) × 2
- Shroud panel (#44) × 2
- Decorative panel (#46) × 1
- Upper shroud (#47) × 2
- Weight stack frame (#7) × 1
- Socket head cap screw M5×16 (#11) × 8

STEP 13

Attach the two weight stack upright end caps (#49) to the weight stack frame (#7) with two M5×16 socket head cap screws (#11), then snap the cover plate (#48) into the upper shrouds (#47).

HARDWARE

- Weight stack upright end cap (#49) × 2
- Weight stack frame (#7) × 1
- Cover plate (#48) × 1
- Upper shroud (#47) × 2
- Socket head cap screw M5×16 (#11) × 2

FINAL CHECK

01 Assembly is complete. Check that the unit is level and plumb. Use a spirit level to check that the guide rods are vertical in both directions. If they are not vertical, loosen the affected frame hardware, realign the frame, and retighten the bolts.

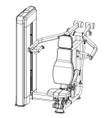

Parts List

Preassembled parts are not listed in this parts list.

NO.	PART / SPECIFICATION	QTY
1	Converging shoulder press side frame assembly	1
4	Spring washer M10	16
2	Right movement arm	1
5	Flat washer M10	16
8	Connecting frame	1
6	Socket head cap screw M10×25	14

NO.	PART / SPECIFICATION	QTY
9	Left movement arm	1
19	Socket head cap screw M10×70	2
13	Foot pad	2
22	Socket head cap screw M8×40	5
14	Seat frame assembly	1
52	Hex socket flat countersunk head screw M8×25	2

NO.	PART / SPECIFICATION	QTY
20	Head pad	1
21	Back pad	1
23	Hole plug	5
38	Cable	1
51	Aluminum cap Ø80×16	2
53	Linkage connecting rod	2