C4A05 Installation Guide

Converging Independent Chest Press

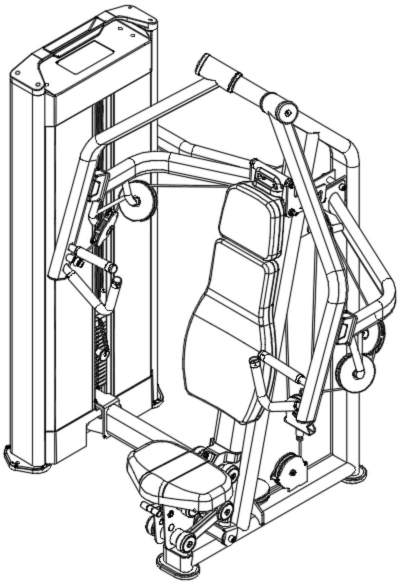

Table of contents

Introduction ······ 2

Assembly ······ 3

Functional area accessories list ······ 11

Introduction

Please take the time to read this instruction carefully before installation. Please refer to the various lists in the manual to confirm the integrity and quantity of all parts (if there are parts missing or damaged during transportation, please call our after-sales service immediately for instructions). Please install the equipment correctly according to the relevant instructions. This equipment is designed to provide the smoothest and most effective exercise. After installation, you need to understand all functions to use it correctly. If you find any problems during use, you should stop using it immediately to avoid physical injury and equipment damage. Please refer to the relevant instructions in time to inquire about the cause. If you cannot solve it, please call our after-sales service. After reading all the instructions carefully, please continue

Rubber rod

Level

Hexagon wrench

Two people

Circlip pliers

Adjustable wrench

Assembly

Step 1: Connect the main side frame (#2), main connecting frame (#3), strengthening connecting frame (#4) and counterweight frame (#1) as shown in the figure.
14×M10*25 hexagon socket head screw (#9)
•14 × M10 spring washers (#10)
6×M10-D20 flat washer (#11)
8× Decorative screw set (#12)

Step 2: Assemble the two flat oval feet (#7) to the main side frame (#2), and the two counterweight frame feet (#8) to the counterweight frame (#1).
Connect it up.

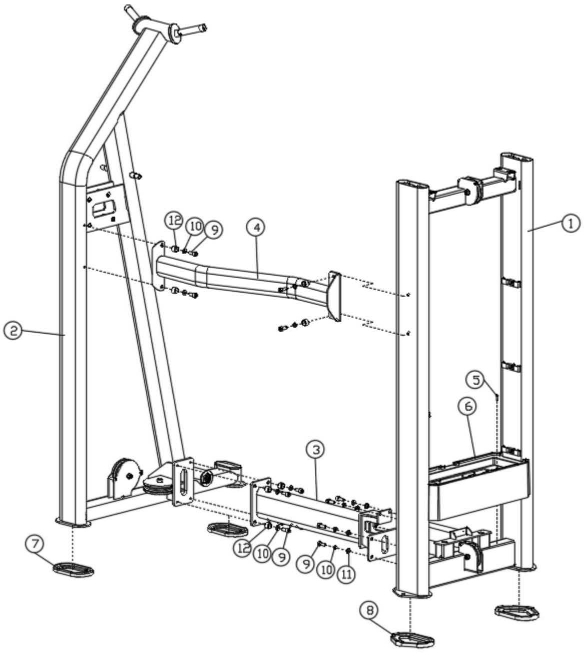

Assembly

Step 3: Assemble the universal seat (#13), backrest cushion (#14), headrest (#15) and backrest frame (#6);
5× M8*40 hexagon socket head screw (#18) • 2 × M10*70 hexagon socket head screw (#20)
•5 x M8 spring washers (#19) 2 x M10 spring washers (#10)
2× Decorative screw set (#12)
Finally, plug the 20-hole plug (#17)
Step 4: Connect the backrest frame assembly (#16) assembled in the previous step to the main side frame (#2);
2×M10*25 hexagon socket head screw (#9)
2×M10 spring washer (#10)
2× Decorative screw set (#12)

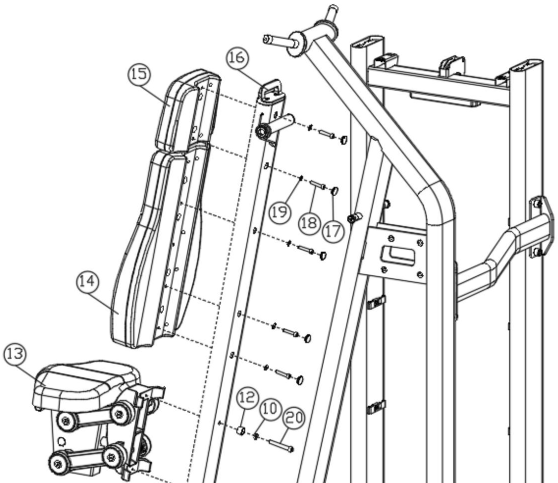

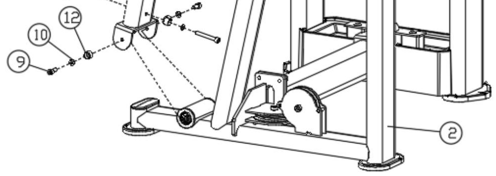

Assembly

Step 5: Connect the left and right lever arm stop brackets (#23) and (#24) to the main side bracket (#2) using the following method:
8×M10*25 hexagon socket head screw (#9)
8×M10 spring washer (#10)
8× Decorative screw set (#12)

Step 6: Use the following method to install the 120 reel box assembly (#21) and the reel shaft-32 (#22) to the left and right arm stop brackets (#23).
(#24) Up.

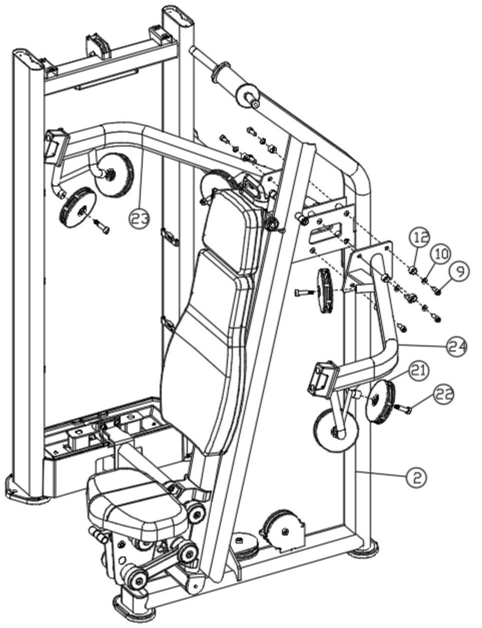

Assembly

Step 7: Use the following method to replace the adjustment handle support plate (#48), adjustment handle (#49), torsion spring (#46) and plug cover (#45).
Connect to the main side frame (#2):

- 4×M10*25 hexagon socket countersunk screw (#25)

1×M10*16 Hexagon socket head screw (#47)

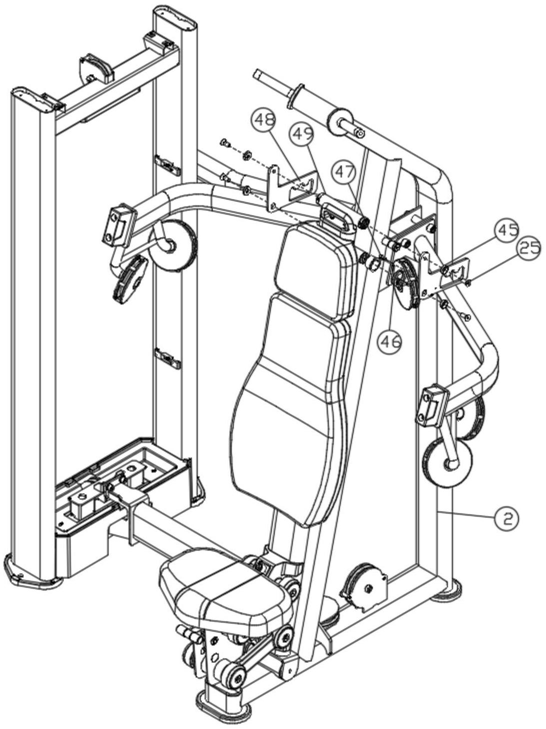

Assembly

Step 8: Connect the left and right lever arms (#25), (#26) and the 76 aluminum cover (#26) to the main side frame (#2) using the following method:

- 2xM10*25 hexagon socket countersunk screw(#25)

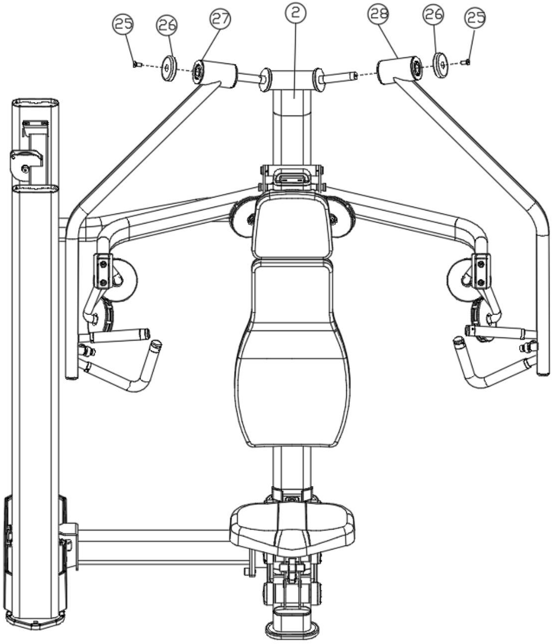

Assembly

Step 9: Connect the two guide rods (#33) and place them into the counterweight frame (#1) using the following method:
Install the counterweight (#29) onto the guide rod (#33) with the spacer facing up.
Install the guide block assembly (#30) onto the guide rod (#33).
Insert the counterweight pin (#32) into the counterweight (#29).
Install the guide bar fixing plate (#31) onto the guide bar (#33).
Install the guide rod fixing plate (#31) to the counterweight frame (#1) as follows:

- 2×M8*20 hexagon socket head screws (#34)

Tighten the bolts with a wrench before proceeding to the next step

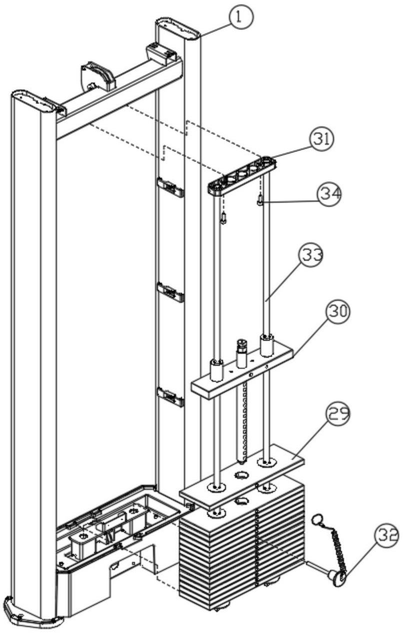

Assembly

Step 10: Insert the wire rope 1 (#34) as shown in the figure. The pre-installed reel box needs to be removed and then reinstalled.
Note that these reels are installed synchronously with the wire rope (#34), and are connected to the counterweight frame (#1) and the 120 branch reel box assembly (#37) respectively.

Step 11: Connect one end of wire rope 2 (#35) to the left lever arm (#27) first, and then connect the other end to the right lever arm (#28).

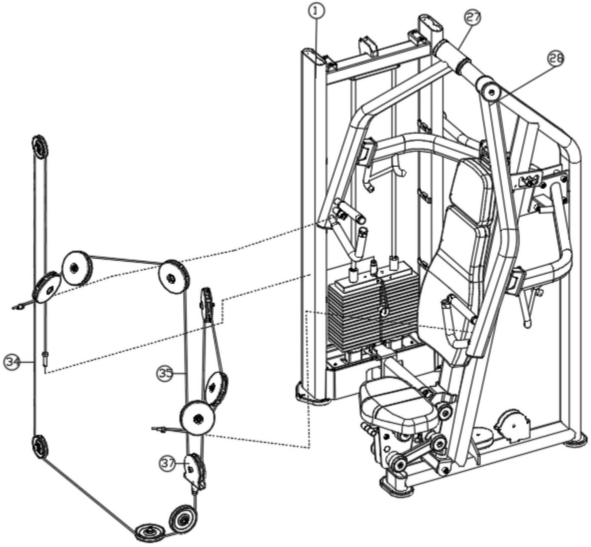

Step 12: Slide the two trim strips (#38) into the two fenders (#44) and attach to the counterweight frame (#1) using the fender hold-down plates.
Slide the trim plate (#39) into the two baffles (#44) and attach to the counterweight frame (#1) using the baffle pressure plates.
Attach the upper guard (#40) to the counterweight frame (#1) as follows:

- 4×M5*15 hexagon socket head screws (#5)

Step 13: Attach the upper cover trim (#42) to the counterweight frame (#1) and snap the upper guard cover (#41) into place using the following method:
Into the upper shield (#40);
4×M6*30 hexagon socket head screws (#43)

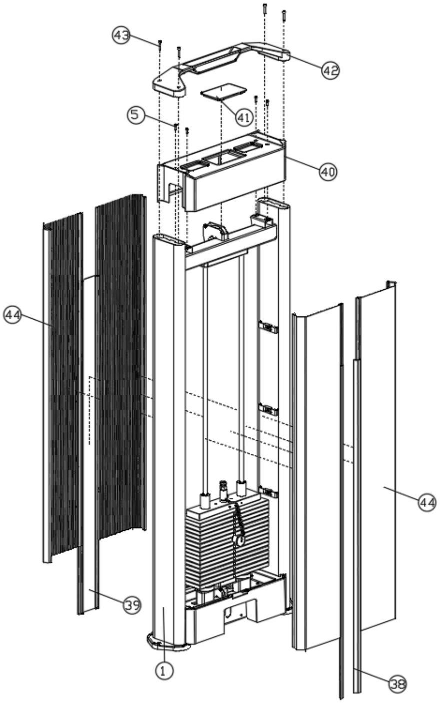

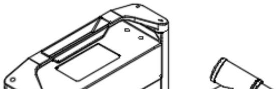

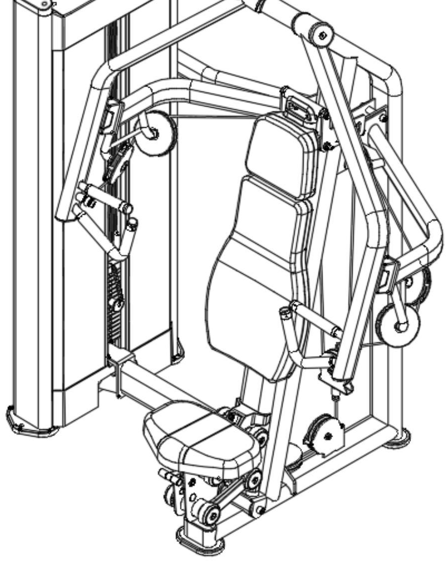

Important Tips

Now that the C4A05 is assembled, you need to take a moment to make sure your unit is level and plumb. Use a level to check that the guide bars are plumb in both directions. If they are not plumb, you may have to loosen some of the frame hardware and reassemble and tighten the bolts.

Accessories List

Serial number	Name and specifications	quantity
1	Counterweight rack	1
2	Main side frame	1
3	Main connecting frame	1
4	Strengthen the connecting frame	1
5	Hexagon socket head screw (M5*15)	6
6	Lower guard	1
7	Flat oval foot pad	2
8	Weight rack foot pads	2
9	Hexagon socket head screw (M10*25)	twenty four
10	Spring washer (M10)	26
11	Flat washer (M10-D20)	6
12	Screw decorative set	20
13	Universal seat	1
14	Back cushion	1
15	Head pad	1
16	Backrest	1
17	Hexagon socket head screw (M8*40)	5
18	Spring washer (M8)	5
19	20-hole plug	5
20	Hexagon socket head screw (M10*70)	2
21	120 reel box assembly	6

Accessories List

Serial number	Name and specifications	quantity
22	Reel-32	6
23	Left lever arm stop	1
24	Right lever arm stop	1
25	Hexagon socket countersunk screw (M10*25)	4
26	76 aluminum cover	2
27	Left moment arm	1
28	Right moment arm	1
29	Counterweight	14
30	Guide block set	1
31	Guide rod fixing plate	1
32	Counterweight latch	1
33	Guide rod	2
34	Hexagon socket head screw (M8*20)	2
35	Weight rope 1	1
36	Weight rope 2	1

37	120 branch reel box assembly	1
38	Decorative Strips	2
39	Decorative panels	1
40	Upper guard	1
41	Upper guard cover	1
42	Upper cover decoration	1
43	Hexagon socket head screw (M6*30)	4
44	Bezel	4

Accessories List

Serial number	Name and specifications	quantity
45	Blocking cover	4
46	Torsion Spring	1
47	Hexagon socket head screw (M6*16)	1
48	Adjustable handle support	2
49	Adjustable handle	1
50		
51		