C415 Installation Guide

Lat Pull Down

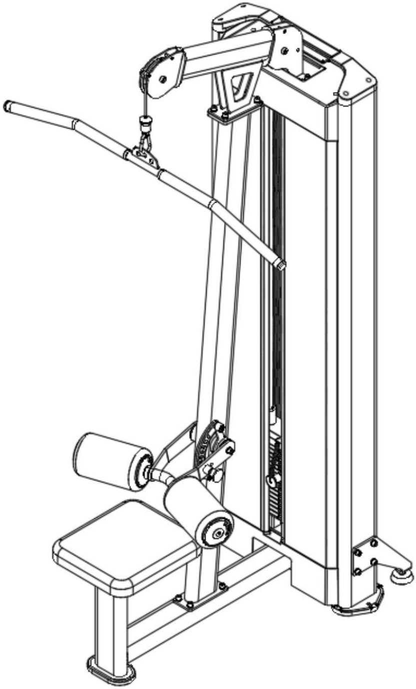

Table of contents

Introduction …………………………………………………… 2

Assembly …………………………………………………… 3

Accessories List …………………………………………………… 12

Introduction

Please take the time to read this instruction carefully before installation. Please refer to the various lists in the manual to confirm the integrity and quantity of all parts (if there are parts missing or damaged during transportation, please call our after-sales service immediately for instructions). Please install the equipment correctly according to the relevant instructions. This equipment is designed to provide the smoothest and most effective exercise. After installation, you need to understand all functions to use it correctly. If you find any problems during use, you should stop using it immediately to avoid physical injury and equipment damage. Please refer to the relevant instructions in time to inquire about the cause. If you cannot solve it, please call our after-sales service. After reading all the instructions carefully, please continue

Rubber rod

Level

Hexagon wrench

Two people

Circlip pliers

Adjustable wrench

Assembly

Step 1: Connect the counterweight lower guard (#6) to the counterweight frame (#1) using the following method:
·2xHexagon socket head screw (#7)

Step 2: Attach the High Tension Base Frame (#2), Low Tension Weight Frame Support Left (#11), and Low Tension Weight Frame Support to the
Connect the right support (#13) to the counterweight rack (#1):
- 12x Hexagon socket head screw (#3)
- 12x Spring washer (#4)
- 12x Flat washer (#5)

Step 3: Install the two weight rack feet (#8) onto the weight rack (#1)
Install the flat oval foot pad (#9) to the high-tension base frame (#2)

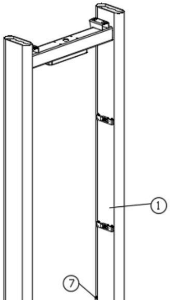

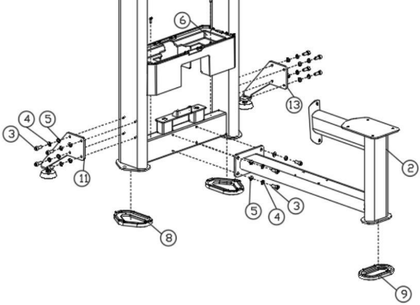

Assembly

Step 4: Connect the high-tension frame (#10) to the bottom frame (#2) using the following method:

- **6x**Hexagon socket head screw (#3)
- **6x**Spring washer (#4)
- **6x**Flat washer (#5)

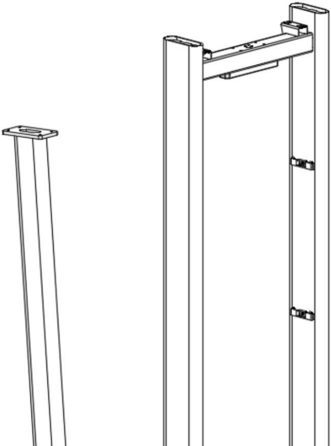

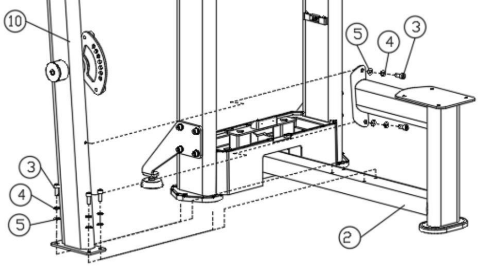

Assembly

Step 5: Connect the high-tension upper arm (#12) to the counterweight frame (#1) and the vertical frame (#10) using the following method:

- 8xHexagon socket head screw (#3)
- 8xFlat washer (#5)
- 8x Spring washers(#4)

NOTE: It is necessary to pass the high-tension upper arm (#12) through the upper guard (#33) before tightening the bolts.

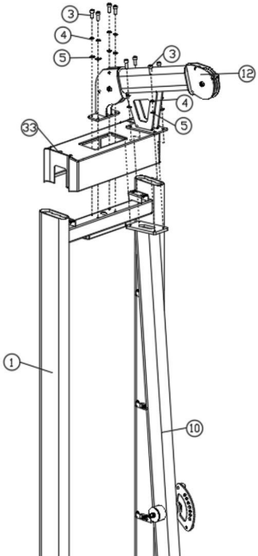

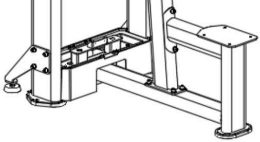

Assembly

Step 6: Slide the two rubber weight pads (#17) onto the two guide rods (#16).

Connect the two counterweight frame bases (#18) and the two guide rods (#16) and place them into the counterweight frame (#1) in the following manner:

·2xHexagon socket head screw (#19)
·2xSpring washer (#20)
·2xFlat washer (#14)

Tighten the bolts with a wrench before proceeding to the next step

Step 7: Install the 18 counterweights (#21) onto the guide rods (#16) with the spacers facing up.

Install the guide block set (#22) onto the guide rod (#16).
Insert the counterweight pin (#23) into the counterweight (#21).
Slide the guide bar retaining plate (#24) onto the guide bar (#16).

Install the guide rod fixing plate (#24) to the counterweight frame (#1) as follows:

·2xHexagon socket head screw (#19)

Tighten the bolts with a wrench before proceeding to the next step

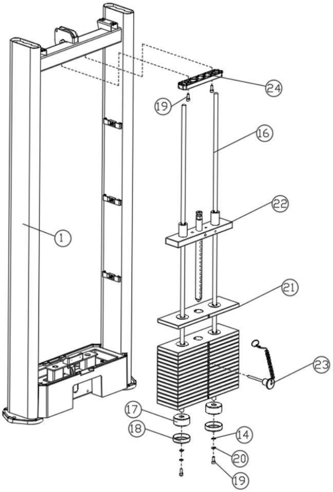

Assembly

Step 8: First disassemble the pre-installed 120 wire reel, insert the wire rope (#25) as shown in the figure, and then reinstall the 120 wire reel;
Note that these reels are installed synchronously with the wire rope.

Step 9: Connect one end of the wire rope (#25) to the counterweight frame (#1) and the other end to the high-tension handle (#26).
are connected.

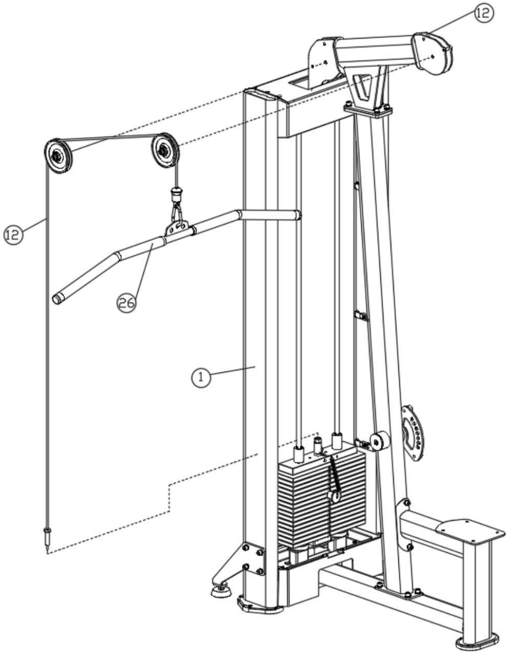

Assembly

Step 10: Connect the high-tension seat cushion (#27) and the high-tension base frame (#2) in the following way:
·4**x**Hexagon socket head screw (#28)
·4**x**Spring washer (#20)
·4**x**Flat washer (#14)

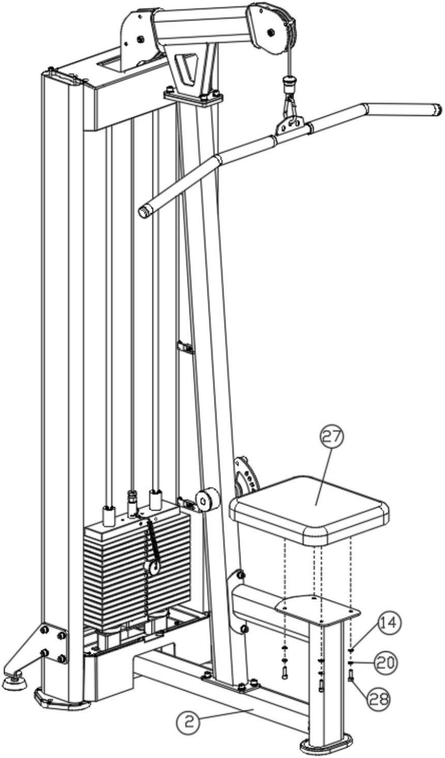

Assembly

Step 11: Connect the Leg Press Stand (#29) and the High Tension Stand (#10) using the following method:

- ·2xHexagon socket head screw (#3)
- ·2xSpring washer (#4)
- ·2xFlat washer (#5)

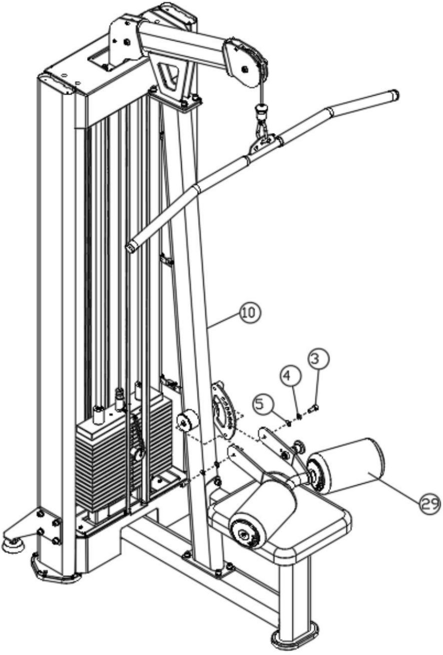

Assembly

Step 12: Slide the two trim strips (#31) into the two fenders (#30) and attach to the counterweight frame (#1) using the fender hold-down plates.
Slide the trim plate (#32) into the two baffles (#30) and attach to the counterweight frame (#1) using the baffle hold-down plates.

Attach the upper guard (#33) to the counterweight frame (#1) in the following manner:

- 4xHexagon socket head screw (#9)

Attach the upper cover trim (#34) to the counterweight frame (#1) as follows:

- 4xHexagon socket head screw (#15)

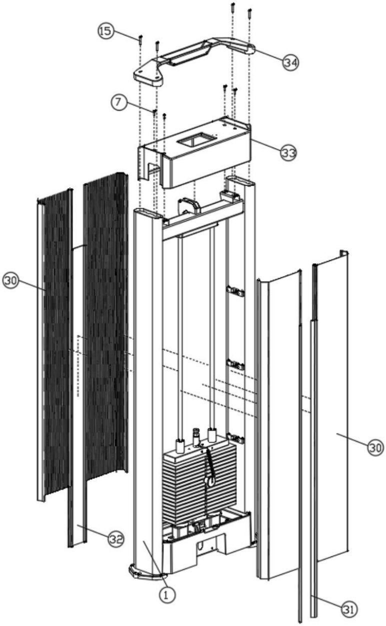

Assembly

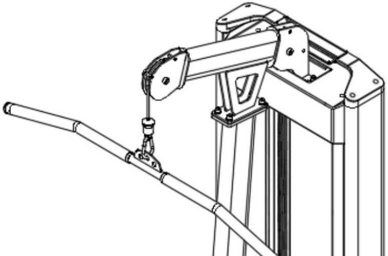

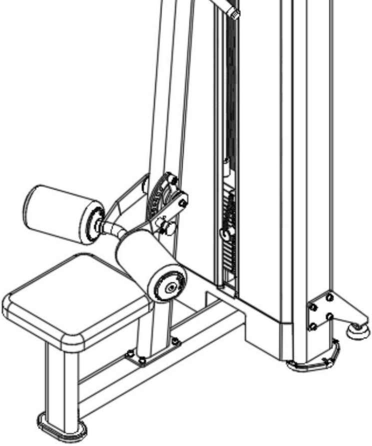

Important Tips

Now that the Lat Pull Down is assembled, you need to take a moment to make sure your unit is level and plumb. Use a level to check that the guide bars are plumb in both directions. If they are not plumb, you may need to loosen some of the frame hardware and reassemble and tighten the bolts.

Accessories List

Serial number	Name and specifications	quantity
1	Counterweight rack	1
2	High tensile chassis	1
3	Hexagon socket head screw (M10*25)	28
4	Spring washer (10)	28
5	Flat washer (10)	28
6	Counterweight lower guard	1
7	Hexagon socket head screw (M5*16)	6
8	Weight rack foot pads	2

9	Flat oval foot pad	1
10	High tensile stand	1
11	Low pull weight rack support left	1
12	High pull upper arm	1
13	Low pull weight rack support right	1
14	Flat washers (8)	2
15	Hexagon socket head screw (M6*30)	4
16	Universal weight guide rod	2
17	Counterweight rubber pad	2
18	Counterweight rack base	2
19	Hexagon socket head screw (M8*20)	4
20	Spring washers (8)	2
21	Counterweight	18

Accessories List

Serial number	Name and specifications	quantity
22	Guide block set	1
23	Counterweight latch	1
24	Guide rod fixing plate	1
25	Wire Rope	1
26	High-tension handle	1
27	High tensile cushion	1
28	Hexagon socket head screw (M8*30)	4
29	High Tension Leg Press	1
30	Bezel	4
31	Counterweight decorative strip	2
32	Counterweight source decorative plate	1
33	Counterweight upper guard	1
34	Upper guard decorative plate	1

Note: Pre-assembled parts are not listed in this table.