82025 Installation Guide

Hip Trainer

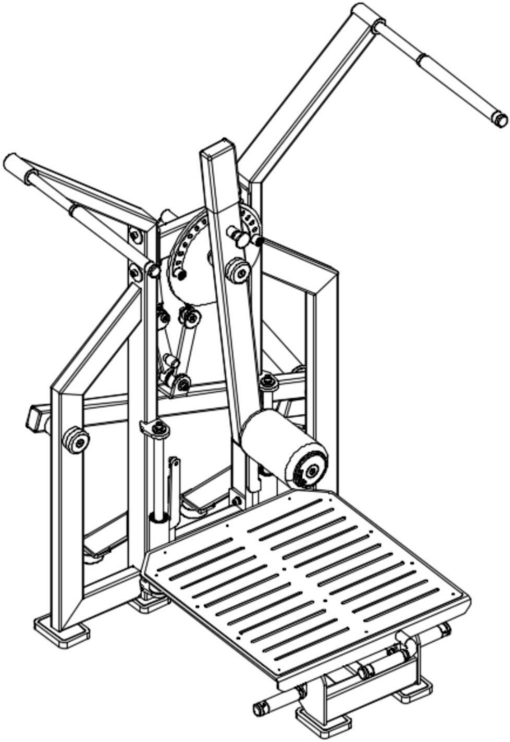

Catalog

Brief introduction............. 3

Assemble................................ 4

Brief Introduction

Please take the time to read this instruction carefully before installation. Please refer to the various lists in the manual to confirm the integrity and quantity of all parts (if there are parts missing or damaged during transportation, please call our after-sales service immediately for instructions). Please install the equipment correctly according to the relevant instructions.

This equipment is designed to provide the smoothest and most effective exercise. After installation, you need to understand all functions to use it correctly. If you find any problems during use, you should stop using it immediately to avoid physical injury and equipment damage. Please refer to the relevant instructions in time to inquire about the cause. If you cannot solve it, please call our after-sales service. After reading all the instructions carefully, please continue

Rubber rod
Level ruler
Allen wrench
Two person
spring clamp
adjustable wrench

4

fasteners

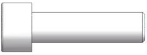

[51]（M10*60）

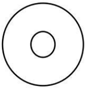

[53]flat washer M10-D50

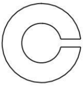

[55]spring washer M10

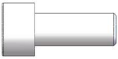

[52]（M10*25）

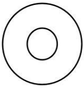

[54]flat washer M10-D20

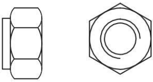

[58]Hexagon self-locking nuts M10

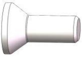

[56]（M10*20）

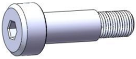

[57]32 bolt

Step1: Connect the bottom frame assembly (#1), the left frame assembly (#2), the right frame assembly (#3) and the lever support frame (#4) in the following way; install the six rectangular foot pads (#50) on the bottom frame assembly (#1), the left frame assembly (#2) and the right frame assembly (#3)

- 4 xHexagon socket head screws M10*60（#51）
- 4 x flat washer M10-D50 （#53）
- 4 x spring pad M10（#55）
- 4 x Hexagon socket head screws M10*25（#52）
- 8 x flat washer M10-D20（#54）
- 4 x Hexagon lock nut M10（#58）

Tighten the bolt with a wrench before proceeding to the next step

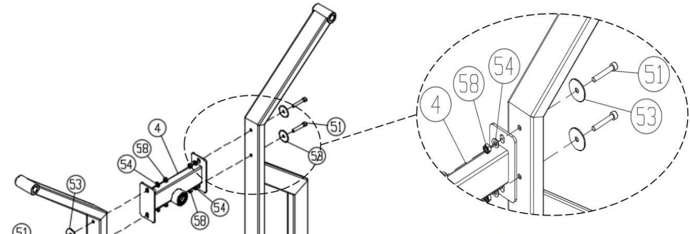

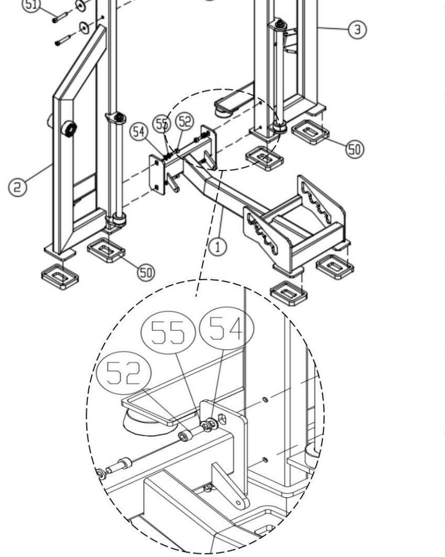

bottom frame assembly（#1）	4xHexagon socket head screws M10*25（#52）
left frame assembly（#2）	4x flat washer M10-D50 （#53）
right frame assembly（#3）	8x flat washer M10-D20（#54）
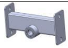 lever support frame（#4）	4xspring washer M10（#55）
6Xrectangular foot pads（#50）	16xHexagon lock nut M10（#58）
4xHexagon socket head screws M10*60（#51）	

Step2: Before assembly, remove the slide rods on the left frame assembly (#2) and the right frame assembly (#3), pass the slide rod through the pedal assembly (#5) using the following method, and then assemble the slide rod with the pedal assembly (#5) to the left frame assembly (#2) and the right frame assembly (#3); use the pedal linkage assembly (#6) to connect the pedal assembly (#5) and the bottom frame assembly (#1); use two gas springs (#7), one on each side, to connect the pedal assembly (#5) and the bottom frame assembly (#1);

- 2 x Hexagon socket head screws M10*25（#52）
- 2 x flat washer M10-D20 （#55）
- 2 x spring washer M10 （#54）

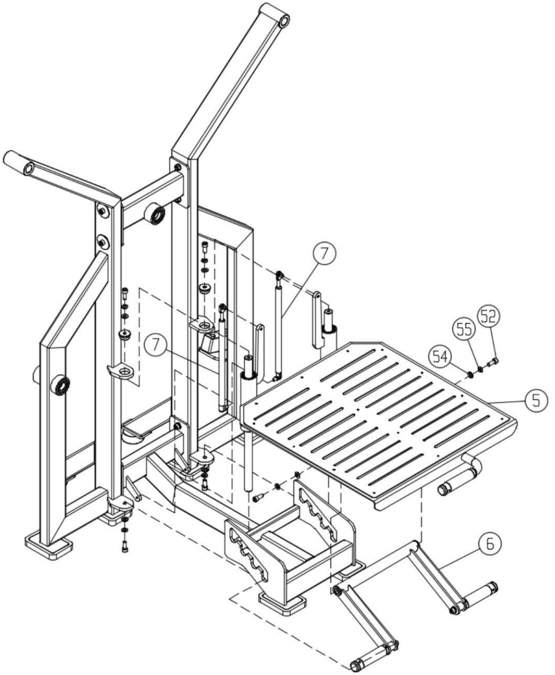

 pedal assembly （#5）
 pedal linkage assembly（#6）
 gas springs （#7）
 2xHexagon socket head screws M10*25（#52）
 2xspring washer M10 （#55）
 2xflat washer M10- D20 （#54）

Step3: Use the following method to place two 6028 bearings (#11) at both ends of the shaft sleeve of the arm support frame (#4); pass the arm shaft assembly (#8) through the arm support frame (#4); install the key (#15) in the slot of the arm shaft assembly (#8); pass the center of the flange assembly (#9) through the arm shaft assembly (#8) and lock it with the key (#15); install the 6204 bearing (#12) on the side of the arm assembly (#10) close to the flange assembly (#9); install the 6205 bearing (#13) on the other side of the arm assembly (#10); install the arm assembly (#10) on the arm shaft assembly (#8) and plug it with a 60 aluminum cover (#14); install the two handrail assemblies (#16) on the top of the left frame assembly (#2) and the right frame assembly (#3) respectively;

- 2 x Hexagon socket head screws M10*25（#52） • 1 x Hexagon socket countersunk screw M10*20 （#56）

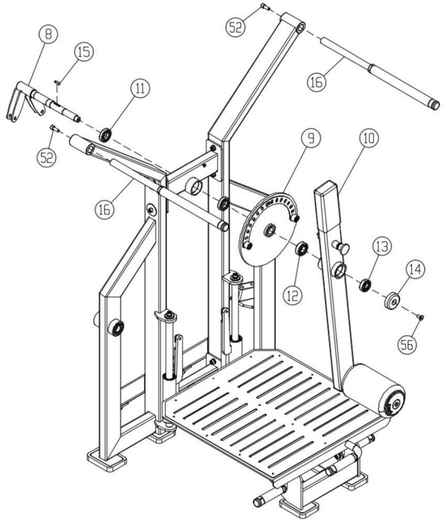

 arm shaft assembly（**#8**）			
 flange assembly（**#9**）			
 arm assembly （**#10**）			
 2 x 6028 bearing（**#11**）	 1 x 6204 bearing（**#12**）	 1 x 6205 bearing（**#13**）	 60 aluminum cover（**#14**）
 key（**#15**）	 2Xhandrail assembly（**#16**）	 2xHexagon socket head screws M10*25（#52）	 1xHexagon socket countersunk screw M10*20（#56）

Step4: Use the following method to install a 6028 bearing (#11) behind the left frame sleeve, install a 6204 bearing (#12) in front of the left frame sleeve, pass the end of the linkage arm assembly (#17) with the shaft through the left frame sleeve, and plug it with a 60 aluminum cover (#14); install the tie rod on the linkage arm to the arm shaft assembly (#8); install the force arm sleeve assembly (#18) on the linkage arm assembly (#17), and plug it with the hanging rod locking cover (#19);

. 2 x 32bolt（#57） . 2 x spring washer M10 （#54）
. 2 x Hexagon lock nut M10（#58） . 2 x Hexagon socket countersunk screw M10*20 （#56）

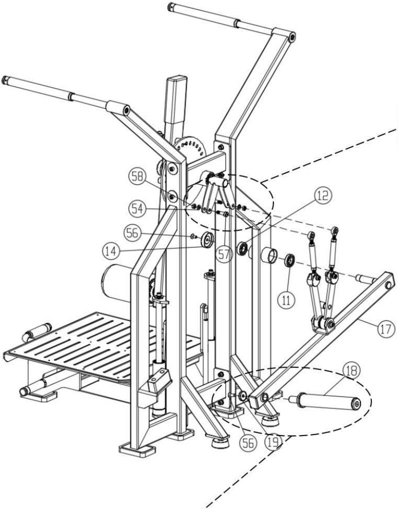

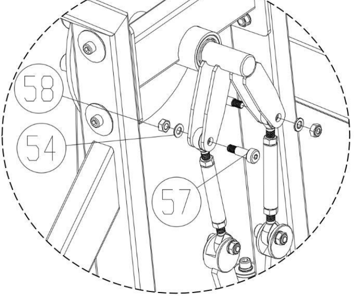

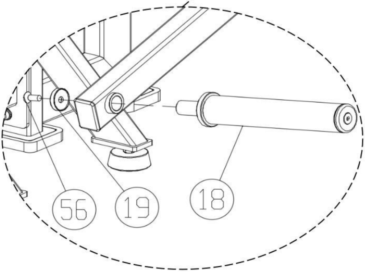

 6028 bearing（#11）	 hanging rod locking cover(#19)
 6204 bearing（#12）	 2 X 32bolt（#57）
 60 aluminum cover（#14）	 2xflat washer M10-D20 （#54）
 linkage arm assembly（#17）	 1xHexagon socket countersunk screw M10*20（#56）
 arm sleeve assembly（#18）	 2xHexagon lock nut M10（#58）

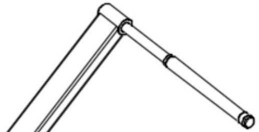

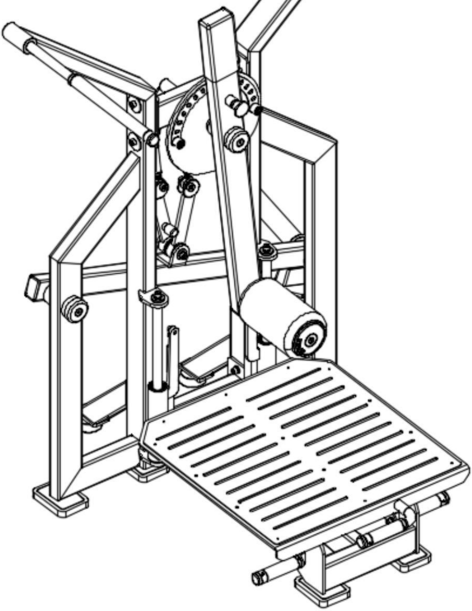

Important Tip.
Now that the Plate Loaded Hip Trainer is assembled, you'll need to take a moment to make sure your unit is level and plumb.

Accessories list

NO	Name and specification	QTY
1	bottom frame assembly	1
2	left frame assembly	1
3	right frame assembly	1
4	lever support frame	1
5	pedal assembly	1
6	pedal linkage assembly	1

7	gas springs	2
8	arm shaft assembly	1
9	flange assembly	1
10	arm assembly	1
11	6028 bearing	3
12	6204 bearing	2
13	6205 bearing	1
14	60 aluminum cover	2
15	key	1
16	handrail assembly	2
17	linkage arm assembly	1
18	arm sleeve assembly组	1
19	hanging rod locking cover	1
50	rectangular foot pads	5
51	Hexagon socket head screws M10*60	4
52	Hexagon socket head screws M10*25	8
53	Hexagon socket head screws M10*20	4
54	flat washer M10-D50	12
55	flat washer M10-D30	6
56	flat washer M10-D20	3
57	spring washer M10	2
58	Hexagon lock nut M10	6

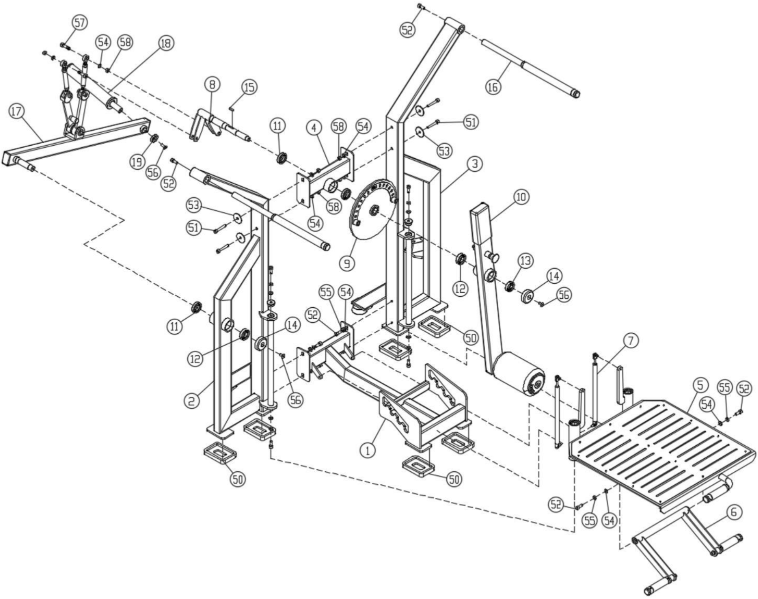Exploded viewer