82020 Installation Guide

Plate Loaded V Squat

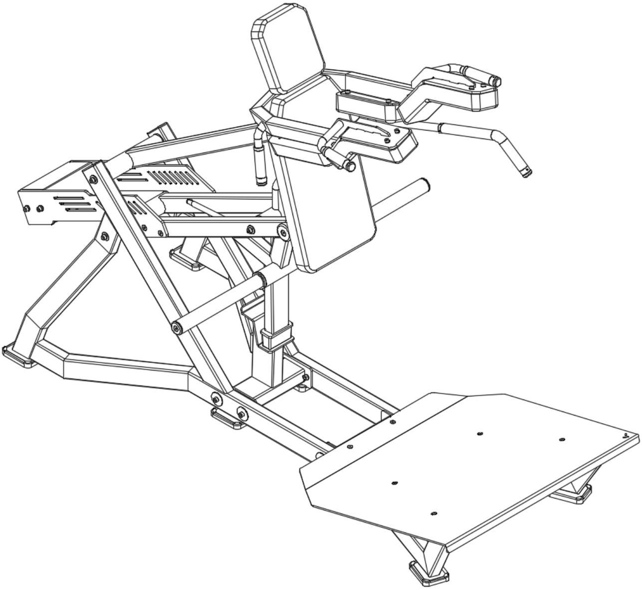

Catalogue

Brief ………………………………………… 2

Installation ………………………………………… 3

ccessories List ………………………………………… attachment

Briefs

Please take the time to carefully read the instructions before installing .Please refer to the manual to determine the list of all components were packaged well. （If there have some parts missed or damaged please immediately call our customer service department）Please refer to the installation instruction while installing.

This device designed to provide the most effective and smoothest training movements. After installing, you can only know how to use the products after you know all the functions. If there is any question， please check the installation insturction and find out the wrong steps during the installing. If still not work, please contact the distributors authorised by original factory. The code and manual will be needed.

TOOLS	Rubber stick
	Levelling instrument
	Socket head screw wrench
	Circlip pliers
	The adjustable wrench
Note: When assembling, it is recommended that two or more people operate	

Installation of Frame

Step 1:Use the below way to connect #1.#2,#3 and #4 to #12 to form Semi-finished product#1

- 8x Hexagon socket head screws with cylindrical head M10*60（#51）
- 8xLarge washer M10-D50 （#55）
- 8x Plain washerM10-D20（#57）

- 8xHexagon lock nut M10 (#60)
- 8x Hexagon socket head screws with cylindrical head M10*25 (#52)
- 8x Spring washer M10 (#59)
- 8x Plain washer M10-D20 (#57)

Step 2:Install 6 rectangular foot pads (#50) to # Semi-Finished #1

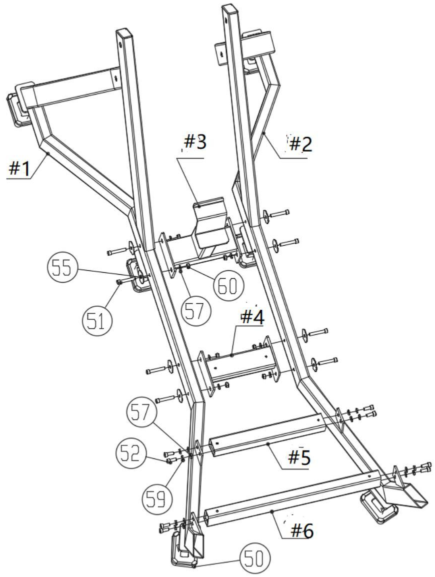

Installation of Frame

Step 3:Use the below way to connect #8.#9,#11 with #13 together to form Semi-finished product#2
- 6x Hexagon socket countersunk head screws M10*20 (#61)
- 2x Hexagon socket head screws with cylindrical head M10*20 (#53)
- 2x Spring washerM10 (#59)
- 2x Plain washer M10-D30 (#56)

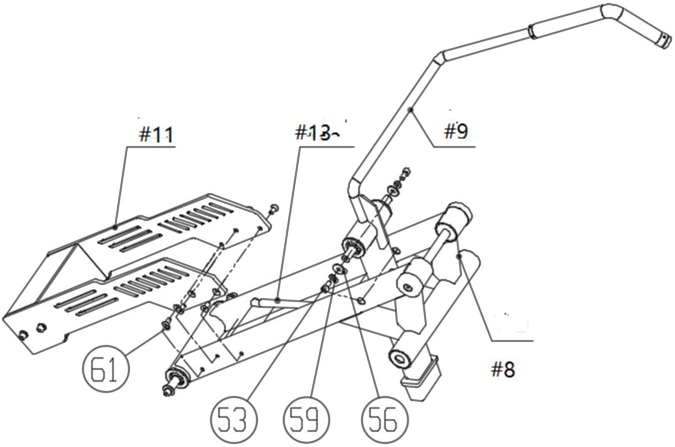

Installation of Frame

Step 4:Use the below way to connect #7 ,Semi-finished product#1 with Semi-finished product#2 to form Semi-finished product#3

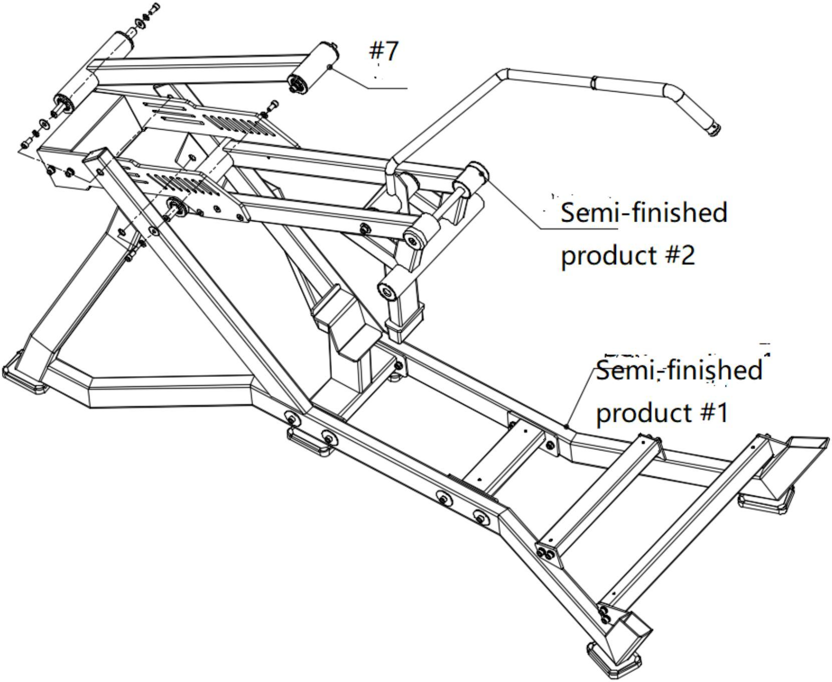

Installation of Frame

Step 5:Use the below way to connect #10 ,#14,#15,#16, with #17 to form Semi-finished product#4

- 17 xHexagon socket head screws with cylindrical head M8*25 (#54)
- 17 x Plain washerM8*D16 (#58)

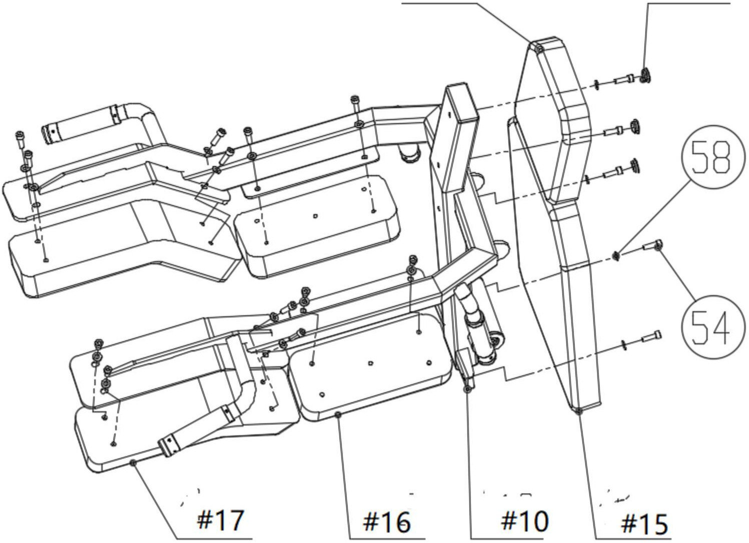

Installation of Frame

Step 6:Use the below way to connect Semi-finished product#3, Semi-finished product#4 with #12 to form Semi-finished product#5

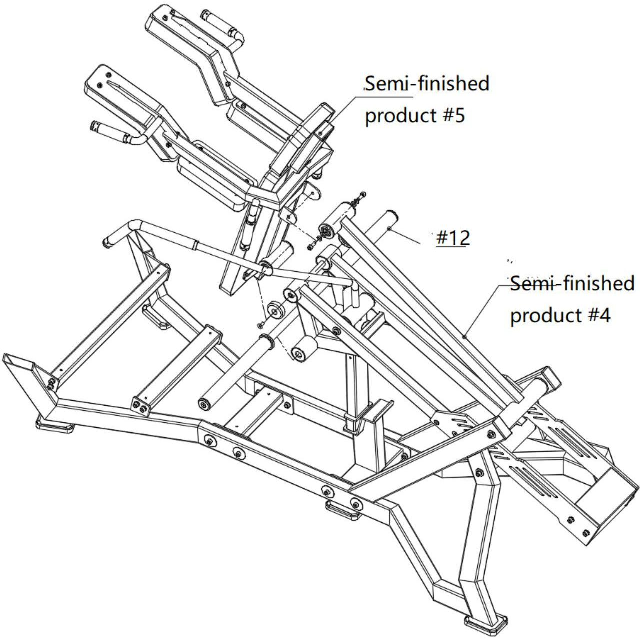

Installation of Frame

Step 7 :Use the below way to connect Semi-finished product#6 with #18

- 6 x Hexagon socket countersunk head screws M8*16（#62）

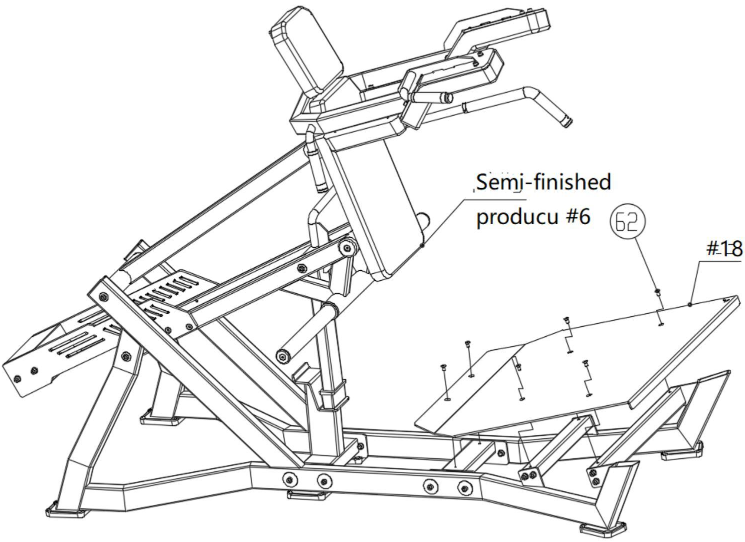

Important Notification

Now G2020 has been assembled, You need to take the time to make sure your device is square and vertical

Accessories List

NO	Name	pictures	QTY	NO	Name	pictures	QTY
1	#1		1	11	#11		1
2	#2		1	12	#12		1
3	#3		1	13	#13		1
4	#4		1	14	#14		1
5	#5		1	15	#15		1
6	#6		1	16	#16		2
7	#7		1	17	#17		2
8	#8		1	18	#18		1
9	#9		1				
10	#10		1				
49	20plug		3	56	Plain washer M10-D30		2
50	Rectangular foot pad		6	57	Plain washer M10-D20		16
51	Hexagon socket head screws with cylindrical head		8	58	Plain washer M8-D16		17
52	Hexagon socket head screws with cylindrical head		8	59	Spring washer M10		10
53	Hexagon socket head screws with cylindrical head		2	60	Hexagon self-locking nut M10		8
54	Hexagon socket head screws with cylindrical head		17	61	Hexagon socket countersunk head screws M10*20		6
55	Plain washer M10-D50		8	62	Hexagon socket countersunk head screws M8*16		6

Note: Pre-assembled parts are not listed in this file.