7357 Installation Guide

Squat Plate

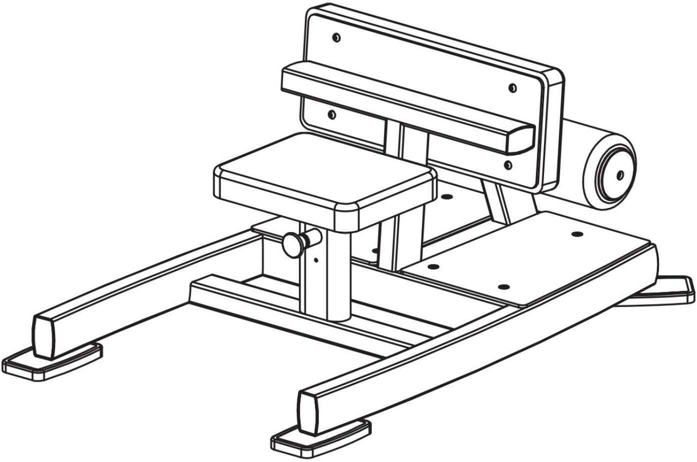

Catalogue

Briefs---3

Cushion & Foot Pad Installation------------------------------4

Seat Installation--5

Accessories List---6

Briefs

Please take the time to carefully read the instruction before installing .Please refer to the manual to determine the list of all components were packaged well. （If there have some parts missed or damaged please immediately call our customer service department）Please refer to the installation instruction while installing.

This device designed to provide the most effective and smoothest training movements. After installing，you can only know how to use the products after you know all the functions. If there is any question， please check the installation instruction and find out the wrong steps during the installing. If still not work, please contact the distributors authorized by original factory. The code and manual will be needed.

Tools

Rubber stick

Levelling instrument

Circlip pliers

Socket head screw wrench

The adjustable wrench

2 person

Cushion & Foot Pad Installation

CAUTION:
The wrench need to tighten the hardware

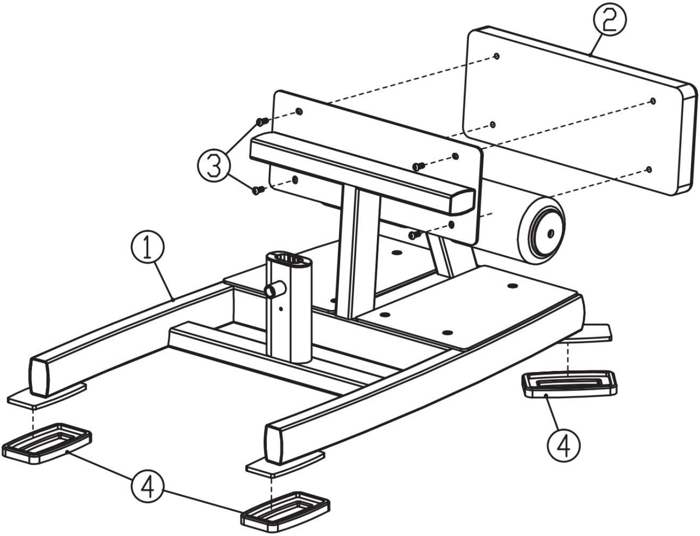

Seat Installation

CAUTION:
The wrench need to tighten the hardware

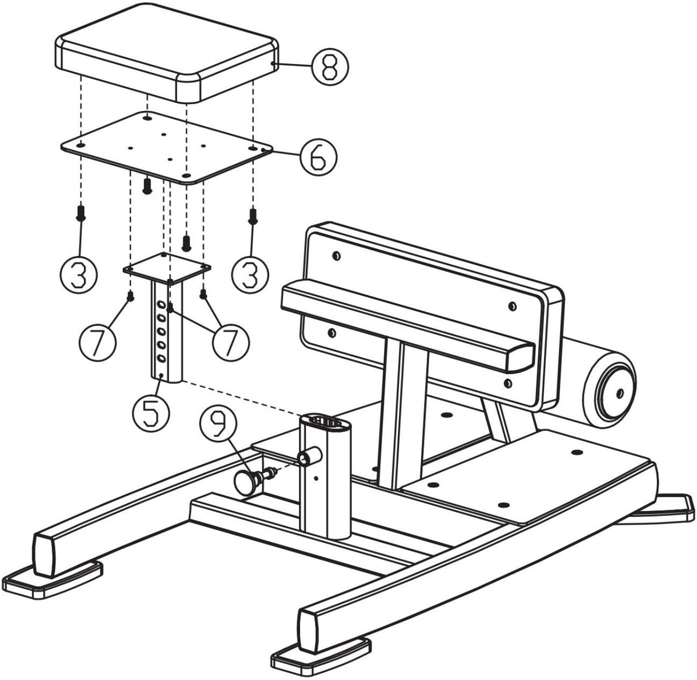

Important Notification:

Now 7357 has been assembled .You need to take the time to make sure your device is square and vertical .With a spirit level to check whether the guide bar perpendicular in the two directions .If not, then you have to loosen some of the vertical frame reassembly hardware and tighten the bolts.

Accessories List

Caution:Some spare parts which have been assembled are not in the list

NO.	Name & Specification	Material	Qty
1	Body Frame	Element	1
2	Cushion	Element	1
3	Hexagon socket button head screws(M8*25)	45	8
4	Long Arc Foot Pad	Rubber	4
5	Seat Frame	Weldment	1
6	Seat Board	Q235	1
7	Hexagon socket button head screws(M6*10)	45	4
8	Cushion	Element	1
9	Pull Pin	Element	1