7341 Installation Guide

Adjustable Ab Board

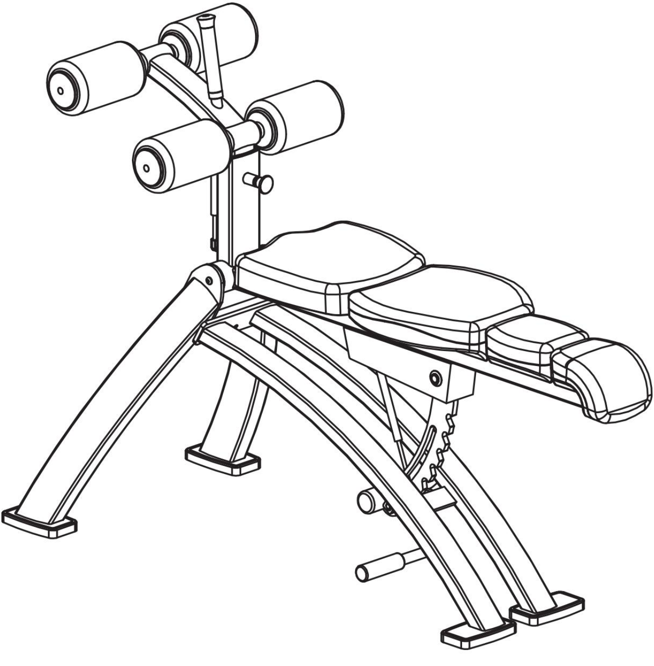

Catalogue

Brief--3

Frame Installation---4

Backboard&Bracket Installation---5

Back Pad Installation---6

Adjustable Frame Installation--7

Accessories List---8

Briefs

Please take the time to carefully read the instructions before installing.Please refer to the manual to determine the list of all components were packaged well.（If there has some parts missed or damaged please immediately call our customer service department）Please refer to the installation instruction while installing.

This device designed to provide the most effective and smoothest training movements. After installing，you can only know how to use the products after you know all the functions. If there is any question， please check the installation instruction and find out the wrong steps during the installing. If still not work, please contact the distributors authorized by original factory. The code and manual will be needed.

Tools

Rubber stick

Levelling Instrument

Circlip pliers

Socket head screw wrench

The adjustable wrench

More than two person

Installation of Frame

CAUTION:
The wrench need to tighten the hardware

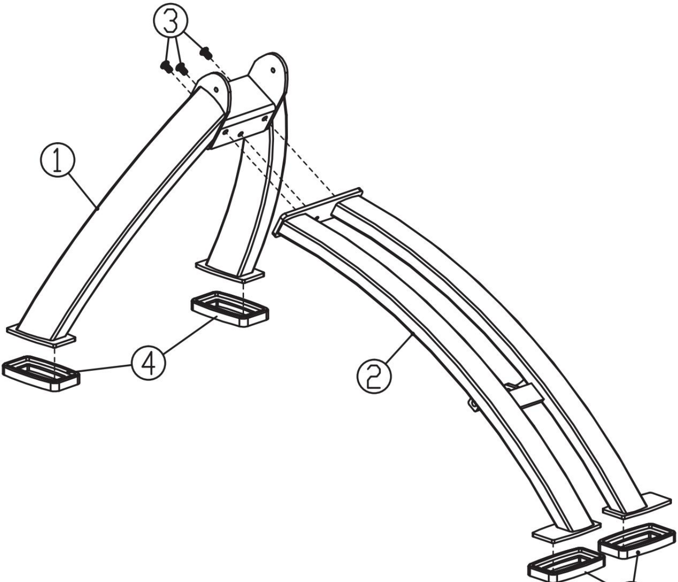

Backboard&Bracket Installation

CAUTION:
The wrench need to tighten the hardware

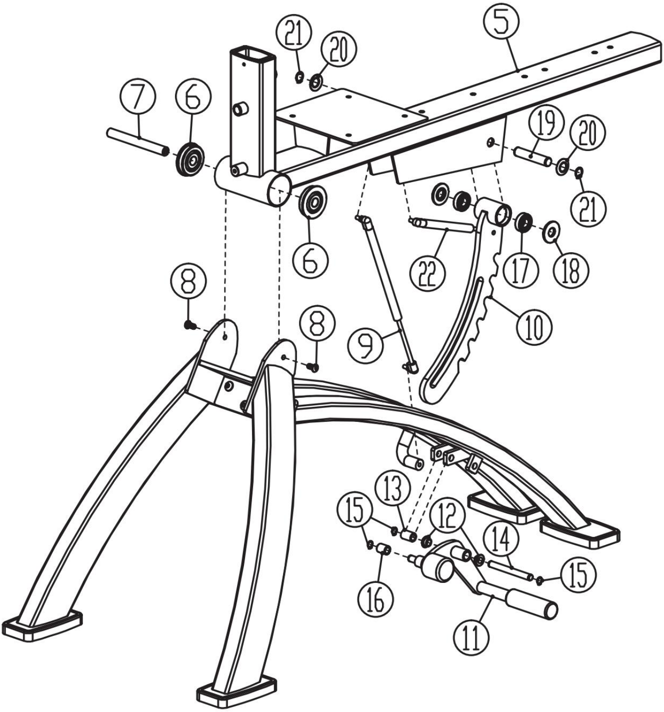

Back Pad Installation

CAUTION:
The wrench need to tighten the hardware

First install cushion, then hanger piece。

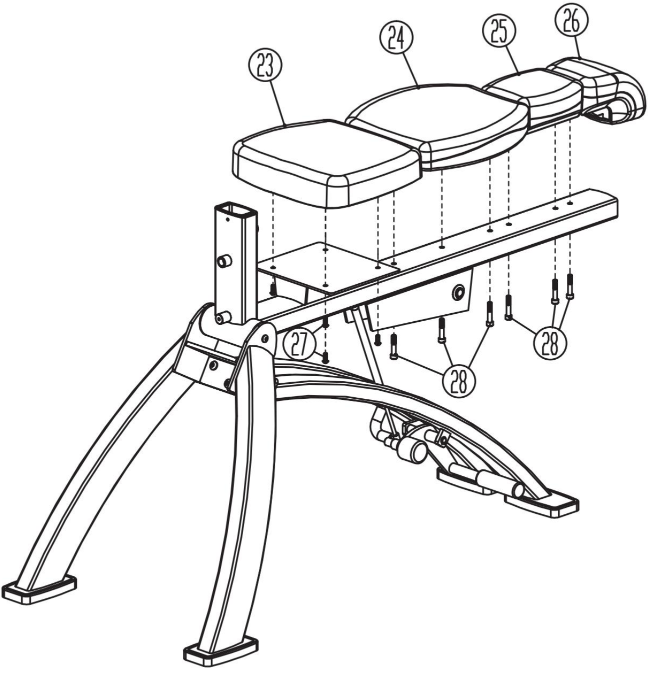

Installation of Adjustable Frame

CAUTION:
The wrench need to tighten the hardware

Some assembly have been omitted for clarity

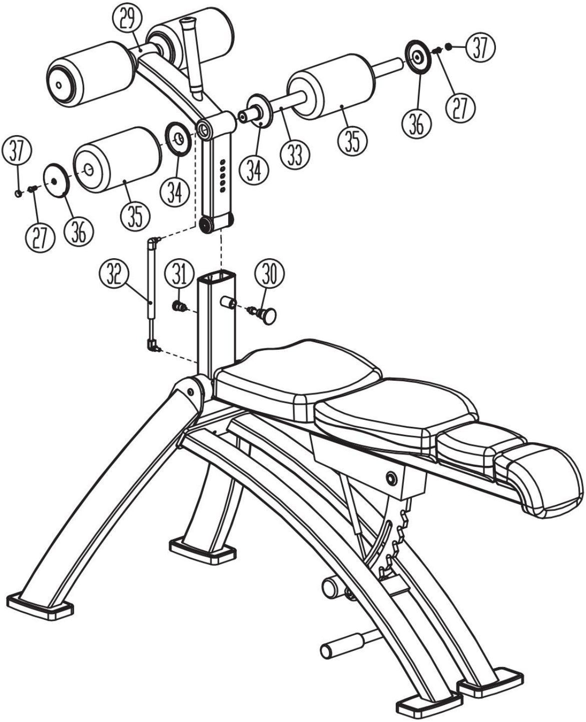

Important Notification:

Now 7341 has been assembled .You need to take the time to make sure your device is square and vertical .With a spirit level to check whether the guide bar perpendicular in the two directions .If not, then you have to loosen some of the vertical frame reassembly hardware and tighten the bolts.

Accessories List

Caution:Some spare parts which have been assembled are not in the list

NO.	Name & Specification	Material	Qty
1	Side Frame	Weldment	1
2	Body Frame	Weldment	1
3	Hexagon socket button head screws(M12*20)	45	3
4	Long Arc Foot Pad	Rubber	4
5	Back Frame	Element	1
6	Deep Groove Ball Bearing(YR6206-2RS)	Bearing steel	2
7	Back Frame Shaft(Φ20*180)	45	1
8	Hexagon socket button head screws(M10*20)	45	2
9	Gas Bar-220	Element	1
10	Hanger Piece	Weldment	1
11	Assisted Power	Element	1
12	Lining	PA	2
13	Pothook Shaft Sleeve	SUS304	1
14	Power Assisted Shaft(Φ1*131)	45	1
15	Φ14 Wild Card	65Mn	3
16	Power Assisted Spacing Sleeve	SUS304	1
17	Deep Groove Ball Bearing6004	Bearing steel	2
18	50Gasket	PA	2
19	Pothook Shaft(Φ20*102)	45	1
20	20Baffle Ring	PA	2
21	Φ2 Wild Card	65Mn	2
22	Gas Bar-100	Element	1
23	Cushion	Element	1
24	Back Pad	Element	1

25	Arolium & Last Pad	Element	1
26	Headrest	Element	1
27	Hexagon socket button head screws(M8*20)	45	6
28	Hexagon socket head cap screws(M10*50)	45	6
29	Adjustable Frame	Element	1
30	Adjustable Pull Pin	Element	1

Accessories List

Caution:Some ave been assembled are not in the list

NO.	Name & Specification	Material	Qty
31	Spacing Pin	45	1
32	Gas Bar-160	Element	1
33	Leather Bucket Rod	Weldment	2
34	Leather Bucket End Cover A	6063-T5	4
35	Leather Bucket	Element	4
36	Leather Bucket End Cover B	6063-T5	4
37	Nut Gap	ABS	4