61A25 Installation Guide

Seated Leg Curl

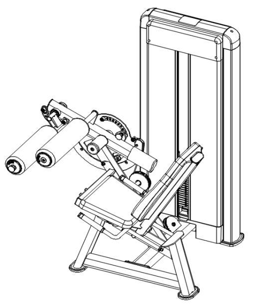

Catalogue

Brief ………………………………………… 2

Installation ………………………………………… 3

Accessories List ………………………………………… 13

Brief

Please take the time to carefully read the instructions before installing .Please refer to the manual to determine the list of all components were packaged well. （If there have some parts missed or damaged please immediately call our customer service department）Please refer to the installation instruction while installing.

This device designed to provide the most effective and smoothest training movements. After installing, you can only know how to use the products after you know all the functions. If there is any question, please check the installation insturction and find out the wrong steps during

Rubber stick

Level bar

Allen wrench

Two people

Circlip pliers

The adjustable wrench

Installation

Step 1: Use the following method to connect the seated biceps frame Ⅰ (#2) and the weight frame (#1) connect them:
4 x Socket Head Cap Screws (#3)
4 x spring washers (#4)
4 x Flat Washers (#5)
Step 2: Attach the lower counterweight shroud (#6) to the counterweight frame (#1) as follows:
2 x Socket Head Cap Screws (#7)
Step 3: Attach the 2 Weight Frame Feet (#8) to the Weight Frame (#1)

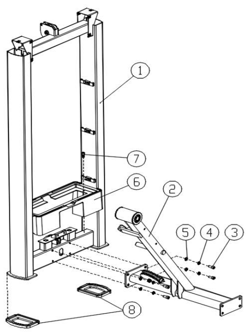

Installation

Step 4: Use the following method to connect the sitting biceps side frame (#9) to the connecting frame Ⅰ (#2) stand up:
4 x Socket Head Cap Screws (#3)
4 x spring washers (#4)
4 x Flat Washers (#5)
Step 5: Install 2 flat oval foot pads (#10) to the seated biceps side frame (#9).

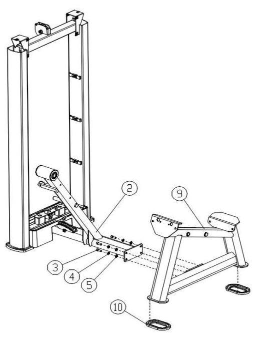

Installation

Step 6: Align the pod cushion (#12) with the biceps pod seat frame using the following method (#11) Connected:
4 x Socket Head Cap Screws (#13)
4 x spring washers (#14) 4 x flat washers (#15)
Step 7: Attach the left armrest (#16), right armrest (#17) to the bicep of the seated thigh using the following method Stool Seat Frame (#11) to connect:
4 x Socket Head Cap Screws (#18)
4 x spring washers (#14) 4 x flat washers (#15)
Step 8: Align the Seat Slider (#19) with the Seat Biceps Seat Frame using (#11) Connected:
4 x Socket Head Cap Screws (#3)
4 x Spring Washers (#4) 4 x Flat Washers (#5)

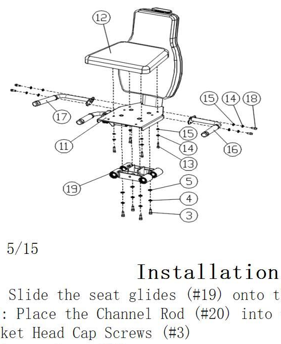

Installation

Step 9: Slide the seat glides (#19) onto the two seat bicep rails (#20).
Step 10: Place the Channel Rod (#20) into the Side Frame (#9) and attach it with:
4 x Socket Head Cap Screws (#3)
4 x spring washers (#4)
4 x Flat Washers (#5)

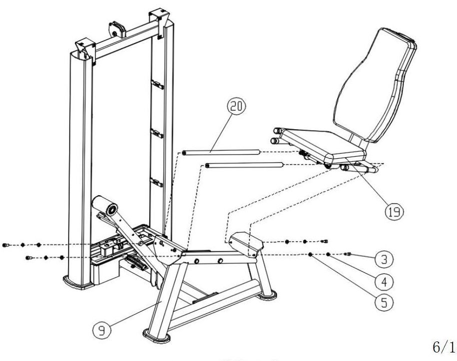

Installation

Step 11: Use the following method to connect the seated biceps anterior linker Ⅱ (#21) to the linker respectively Ⅰ (#2), side frame (#9) connect:
2 x Socket Head Cap Screws (#3)
4 x spring washers (#4)
4 x Flat Washers (#5)
2 x Socket Head Cap Screws (#22)

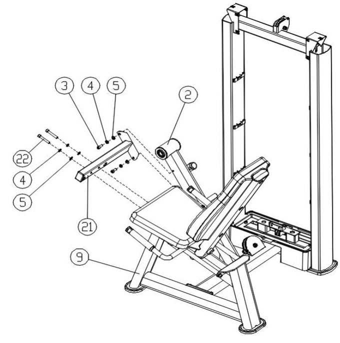

Installation

Step 12: Assemble the seated bicep arm assembly (#23), flange (#24) as follows
To connect with seated biceps I (#2):
2 x Hexagon socket flat head screws (#27)
- 1 x 60 Aluminum Cover (#25)

1 x 76 Aluminum Cover (#26)

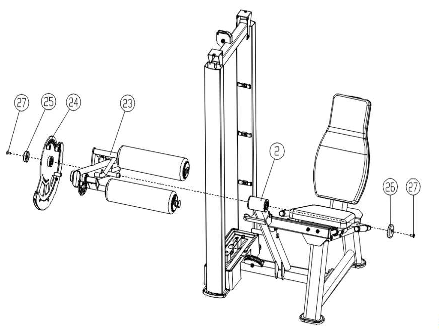

Installation

Step 13: Slide the two weight rubber pads (#29) onto the two guide rods (#28).
Attach the two counterweight frame mounts (#30) to the two guide rods (#28) as follows:
Link up and place in the weight rack (#1):
2 x Socket Head Cap Screws (#18)
2 x spring washers (#14) 2 x flat washers (#15)
Wrench to tighten the bolts before proceeding to the next step
Step 14: Install the 16 Weights (#31) onto the Guide Rods (#28) and Make the Spacers up. Install Guide Block Set (#32) onto Guide Rod (#28).
Insert weight pin (#34) into weight (#31).
Slide Guide Rod Retainer Plate (#33) onto Guide Rod (#28).
Install the Guide Rod Mounting Plate (#33) to the Counterweight Frame (#1) as follows:
2 x Socket Head Cap Screws (#18)
Wrench to tighten the bolts before proceeding to the next step

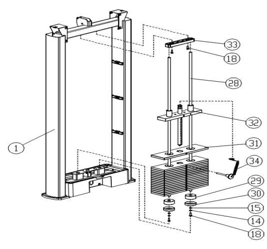

Installation

Step 15: First disassemble the pre-installed 95 line wheel and 120 line wheel, and thread the wire rope as shown in the figure (#35), reinstall all reels.
Connect the 120 spool (#36), 2 spool boxes (#37) in the following way
The two-end connecting frame Ⅰ (#2) connects:
1 x Spool Shaft (#39) 2 x Spool Box Bushings (#38)
Note that these reels are installed in tandem with the wire rope (#35).
Step 16: Connect one end of the wire rope (#35) to the flange (#24) first, and the other end
Then attach to the counterweight frame (#1).

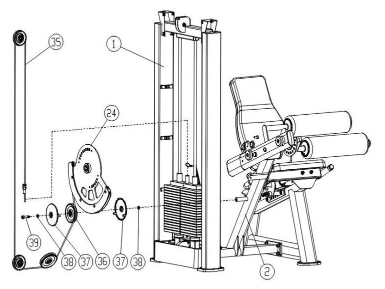

Installation

Step 17: Slide the two trim strips (#41) into the two bezels (#40), using the bezel clamps
Attaches to counterweight frame (#1).
Slide trim (#42) into both fenders (#40), attach using fender clamps
to the counterweight rack (#1).
Attach the two upper shrouds (#43) to the weight frame (#1) as follows:
8 x Socket Head Cap Screws (#7)
Step 18: Attach the two weight riser plugs (#44) to the weight frame using the following method
(#1): 2 x Socket Head Cap Screws (#7)
STEP 19: Snap the upper shroud top cover (#45) to the upper shroud (#43).

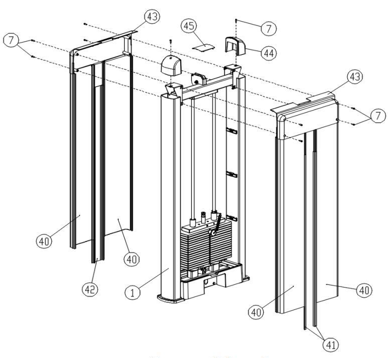

Installation

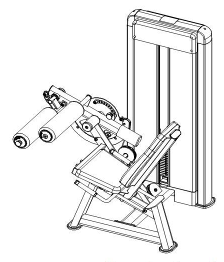

important notes

Now that the seat leg curl is assembled, you need to take a moment to make sure your unit is level and vertical. Use a spirit level to check that the guide bars are perpendicular in both directions.
Some framing hardware must be loosened to reassemble and bolts tightened if not plumb.

accessories list

No.	Name & Specification	Qty
1	weight frame	1
2	the seated biceps frame Ⅰ	1
3	Socket Head Cap Screws (M10*25)	18
4	spring washers (10)	20
5	flat washers (10)	20
6	lower counterweight shroud	1
7	Socket Head Cap Screws (M5*16)	12
8	Weight Frame Feet	2
9	seated biceps side frame	1
10	flat oval foot pads	2
11	biceps pod seat frame	1
12	the pod cushion	1
13	Socket Head Cap Screws (M8*25)	4
14	spring washers (8)	10
15	flat washers (8)	10
16	the left armrest	1
17	right armrest	1
18	Socket Head Cap Screws (M8*20)	8
19	the Seat Slider	1
20	bicep rails	2
21	biceps anterior linkerⅡ	1

accessories list

No.	Name & Specification	Qty
22	Hexagon socket flat head screw (M10*55)	2
23	the seated bicep arm assembly	1
24	Flange	1
25	60 Aluminum Cover	1
26	76 aluminum cover	1
27	Hexagon socket flat head screw (M10*25)	2
28	Guide Rod	2
29	weight rubber pads	2
30	counterweight frame mounts	2
31	Weights stack	16
32	Guide Block Set	1
33	Guide Rod Retainer Plate	1
34	weight pin	1
35	cable	1
36	the 120 spool	1
37	spool boxes	2
38	Spool Box Bushings	2
39	Spool Shaft	1
40	fenders	4
41	trim strips	2
42	trim	1

accessories list

No.	Name & Specification	Qty
43	upper shrouds	2
44	riser plugs	2
45	the upper shroud top cover	1

Note: Pre-assembled parts not listed in this table