61A24 Installation Guide

Leg Extension

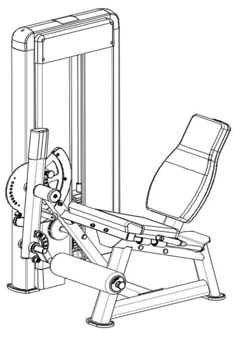

Catalogue

Brief ……………………………………………… 2
Installation ……………………………………………… 3
Accessories List ……………………………………………… 14

Brief

Please take the time to carefully read the instructions before installing .Please refer to the manual to determine the list of all components were packaged well. （If there have some parts missed or damaged please immediately call our customer service department）Please refer to the installation instruction while installing.

This device designed to provide the most effective and smoothest training movements. After installing，you can only know how to use the products after you know all the functions. If there is any question， please check the installation insturction and find out the wrong steps during the installing. If still not work, please contact the distributors authorised by original factory. The code and manual will be needed.

Rubber stick

Level bar

Allen wrench

Two people

Circlip pliers

The adjustable wrench

Installation

Step 1: connect the leg extension weight frame I (#2) and weight frame (#1)

4 x Hexagon socket head cap screws (#3)
4 x Spring Washers (#4) 4 x Flat Washers (#5)
Step 2:connect the shroud under the weight stack (#6) to the weight frame (#1)
2 x Hexagon socket head cap screws (#7)
Step 3: Attach the 2 Feet pad of weight frame (#8) to the Weight Frame (#1)

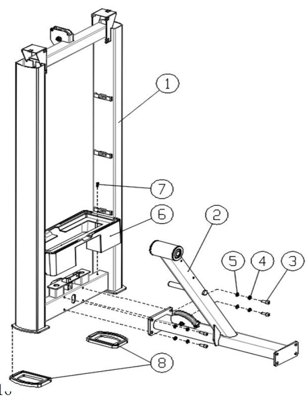

Installation

Step 4: Put the leg extension side frame (#9) and connecting frame Ⅰ (#2)

4 x Hexagon socket head cap screws (#3)
4 x spring washers (#4)
4 x Flat Washers (#5)
Step 5: Install 2 Flat oval foot pad (#10) to the leg extension side frame (#9).

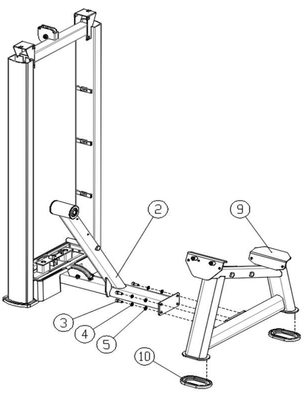

Installation

Step 6: connect the cushion (#12) to leg extension seat frame (#11)

4 x Hexagon socket head cap screws (#13) 4 x Flat Washers (#14)
Step 7: connect the left handrail (#15), right handrail (#16) and leg extension seat frame (#11) together

4 x Hexagon socket head cap screws (#17)
4 x Spring Washers (#18) 4 x Flat Washers (#14)
Step 8: connect the seat slide parts (#19) and leg extension seat frame (#11)

4 x Hexagon socket head cap screws (#3)
4 x Spring Washers (#4) 4 x Flat Washers (#5)

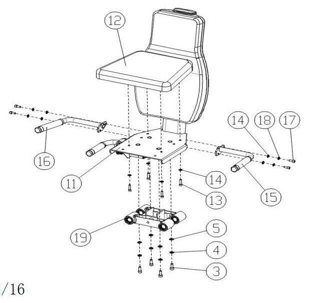

Installation

Step 9: the seat slide parts (#19) onto the two-strand leg extension rail (#20).
Step 10: put leg extension rail (#20) into the Side Frame (#9) and connect them
4 x Hexagon socket head cap screws (#3)
4 x spring washers (#4)
4 x Flat Washers (#5)

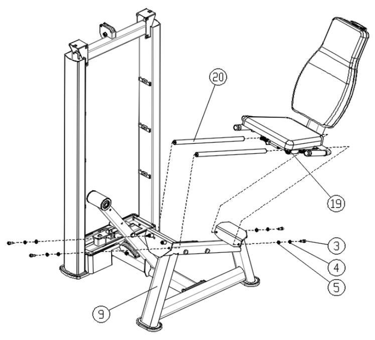

Installation

Step 11: connect the leg extension frame II (#21) ,connecting frame I (#2), side frame (#9):
2 x Hexagon socket head cap screws (#3)
4 x spring washers (#4)
4 x Flat Washers (#5)
2 x Hexagon socket head cap screws (#22)

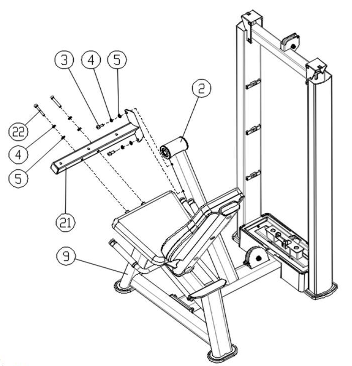

Installation

Step 12: Use the following method to connect the quad seat cushion (#23) to the leg extension connector II (#21) Connected:
3 x Hexagon socket head cap screws (#13)
3 x Flat Washers (#14)
Step 13: Install the 3 Hole Plugs (#24) onto the leg Extension frame II (#21).

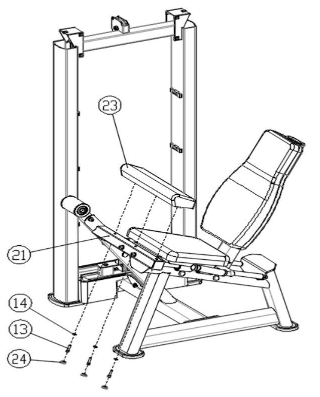

Installation

Step 14: Connect the quad extension arm (#25), flange (#26) to the
The four-head extension bracket Ⅰ (#2) connects:
2 x Hexagon socket flat head screws (#27)
1 x 60 Aluminum Cover (#28) 1 x 76 Aluminum Cover (#29)
Step 15: Attach the Quad Extension Leg Press (#30) to the Quad Extension Arm (#25) Connected:
1 x Socket Head Screw (#27) 1 x 60 Aluminum Cap (#28)

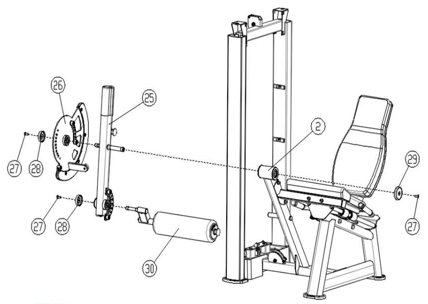

Installation

Step 16: Slide the two weight rubber pads (#32) onto the two guide rods (#31).
Attach the two counterweight frame mounts (#33) to the two guide rods (#31) in the following manner:
Link up and place in the weight rack (#1):
2 x Socket Head Cap Screws (#17)
2 x spring washers (#18) 2 x flat washers (#14)
Wrench to tighten the bolts before proceeding to the next step
Step 17: Install the 16 Weights (#34) onto the Guide Rods (#31) and Make the Spacers up. Install Guide Block Set (#35) onto Guide Rod (#31).
Insert weight key (#37) into weight (#34).
Slide Guide Rod Retainer Plate (#36) onto Guide Rod (#31).
Install the Guide Rod Mounting Plate (#36) to the Counterweight Frame (#1) as follows:
2 x Socket Head Cap Screws (#17)
Wrench to tighten the bolts before proceeding to the next step

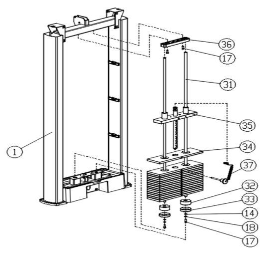

Installation

Step 18: First disassemble the pre-installed 95 line wheel and 120 line wheel, and thread the wire rope as shown in the figure (#38), reinstall all reels.
Use the following method to connect the 120 reel (#39), 2 reel boxes (#40) and the four ends of the strand
The extension bracket Ⅰ (#2) connects:
1 x Spool Shaft (#42) 2 x Spool Box Bushings (#41)
Note that these reels are installed in tandem with the wire rope (#38).
Step 19: Connect one end of the wire rope (#38) to the flange (#26) first, and the other end to
Attaches to counterweight frame (#1).

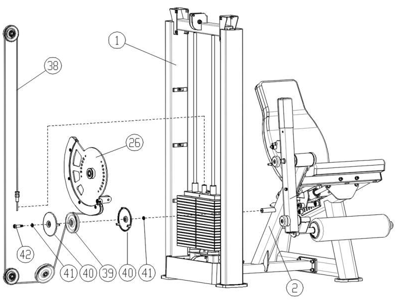

Installation

Step 20: Slide the two trim strips (#44) into the two bezels (#43), using the bezel clamps
Attaches to counterweight frame (#1).
Slide trim (#45) into both fenders (#43), attach using fender clamps
to the counterweight rack (#1).
Attach the two upper shrouds (#46) to the weight frame (#1) as follows:
8 x Socket Head Cap Screws (#7)
Step 21: Attach the two weight riser plugs (#47) to the weight frame using the following method (#1):
2 x Socket Head Cap Screws (#7)
STEP 22: Snap the upper shroud top cover (#48) to the upper shroud (#46).

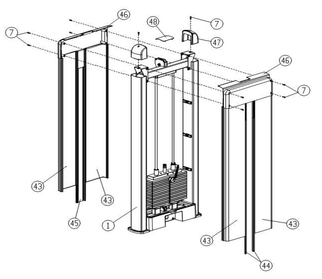

Installation

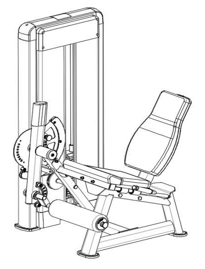

important note

Now that the Inner and Outer Thigh Trainer is finished, you need to make sure that the machine is level and vertical. Use a spirit level to check that the guide bars are perpendicular in both directions. Some framing hardware must be loosened to reassemble and bolts tightened if not plumb.

Accessory List

NO	Name and specification	Quantity
1	weight frame	1
2	leg extension weight frame Ⅰ	1
3	Hex socket head cap screw（M10*25）	18
4	spring washer（10）	20
5	Flat Washers（10）	20
6	shroud under the weight stack	1
7	Hex socket head cap screw（M5*16）	12
8	Feet pad of weight frame	2
9	leg extension side frame	1
10	Flat oval foot pad	2
11	leg extension seat frame	1
12	the cushion	1
13	Hexagon socket head cap screws（M8*25）	7
14	Flat Washers（8）	13
15	left handrail	1
16	right handrail	1
17	Hexagon socket head cap screws（M8*20）	8
18	spring washer（8）	6
19	seat slide parts	1
20	leg extension rail	2
21	the leg extension frameⅡ	1

Accessory List

NO	Name and specification	Quantity
22	Hexagon socket head cap screws（M10*70）	2
23	seat	1
24	20 Hole Plugs	3
25	the quad extension arm	1
26	flange	1
27	Hexagon socket flat head screws（M10*25）	3
28	60 Aluminum Cover	2
29	76 Aluminum Cover	1
30	Quad Extension Leg Press	1
31	guide rods	2
32	weight rubber pads	2
33	counterweight frame mounts	2
34	weight stack	16
35	Guide Block Set	1
36	guide rod fixing plate	1
37	weight stack pin	1
38	cable	1
39	120 reel	1
40	reel boxes	2
41	Spool Box Bushings	2
42	Spool Shaft	1

Accessory List

NO	Name and specification	Quantity
43	bezels	4
44	trim strips	2
45	decorative plate	1
46	upper shrouds	2
47	weight riser caps	2
48	upper shroud top cap	1

Note: Pre-assembled parts not listed in this table。