61A23 Installation Guide

Outer Thigh Abductor

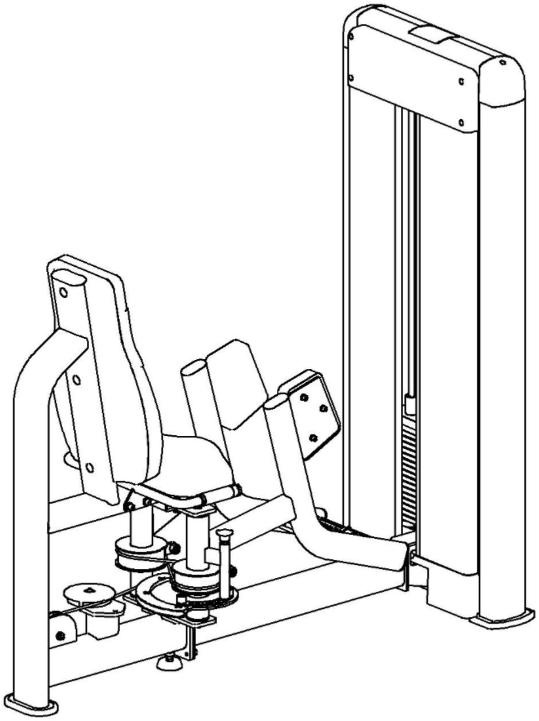

Catalog

Introduction ………………………………………………………… 2

Assemble ………………………………………………………… 3

Accessory List ………………………………………………………… 21

Introduction

Please take the time to read these instructions carefully before installation. Please refer to the list in the manual to confirm the completeness and quantity of all parts (if any parts are missing or damaged in transit, please call our company immediately for after-sales instructions) When installing the equipment, please follow the instructions for proper installation.

This equipment is designed to provide the most smoothly and effective exercise. After installation, you need to understand all the functions in order to use correctly.If problems found when use,you should immediately stopto avoid physical injury and equipment damage. And timely refer to the relevant instructions to inquire about the cause, if you can not solve please call the company after-sales. After carefully reading all the instructions, please continue

Rubber Sticks
Level Ruler
Hexagonal wrench
Two people
Spring Clamp
Adjustable wrench

Assemble

Step 1: Connect the guard pressure plate (#2) to the counterweight frame (#1) with the following method:

- 6 x Hexagon socket cheese head screws (#3)

Step 2: Connect the counterweight lower shield (#4) to the counterweight frame (#1) using the following meth
- 2 x Hexagon socket cheese head screws (#3)

Step 3: Install ten quick wire clips (#5) to the counterweight frame (#1)

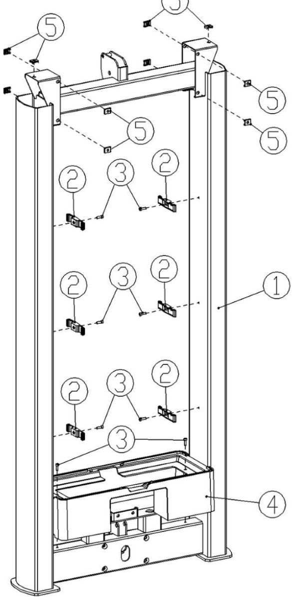

Step 4: Install the plug cover-50x120 (#7) to the outer thigh side frame (#6)

Step 5: Connect the outer thigh connector (#8) to the outer thigh side frame (#6) using the following method:
- 4 x Hexagon socket flat round head screws (#10)
- 4 x Spring washers (#11)
- 4 x Flat washer (#12)

Tighten the bolt with a wrench, then proceed to the next step

Step 6: Connect the outer thigh attachment plate (#9) to the outer thigh side frame (#6) using the following method:
- 4 x Hexagon socket cheese head screws (#14)
- 4 x Hexagonal self-locking nuts (#13)
- 8 x Flat washer (#12)

Tighten the bolt with a wrench, then proceed to the next step

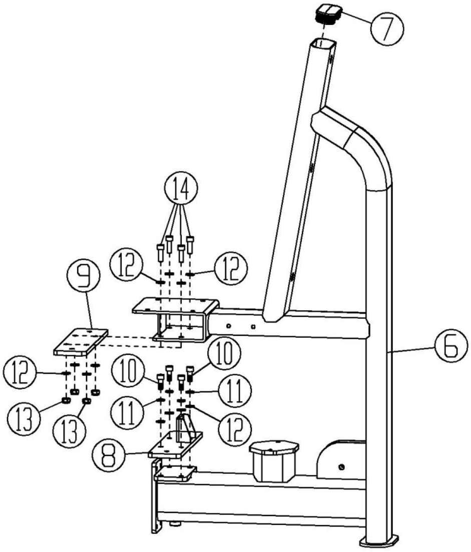

Step 7: Connect the outer thigh attachment bracket (#15) to the counterweight bracket (#1) and outer thigh side bracket (#6)

using the following method:

- 6 x Hexagon socket cheese head screws (#16)
- 4 x Hexagon socket cheese head screws (#10)
- 10 x Spring washers (#11)
- 10 x Flat washer (#12)

Tighten the bolt with a wrench, then proceed to the next step

Step 8: Install the two counterweight frame feet (#17) to the counterweight frame (#1)
Install flat oval foot pad (#18) and movable foot pad (#19) to outer thigh side frame (#6)

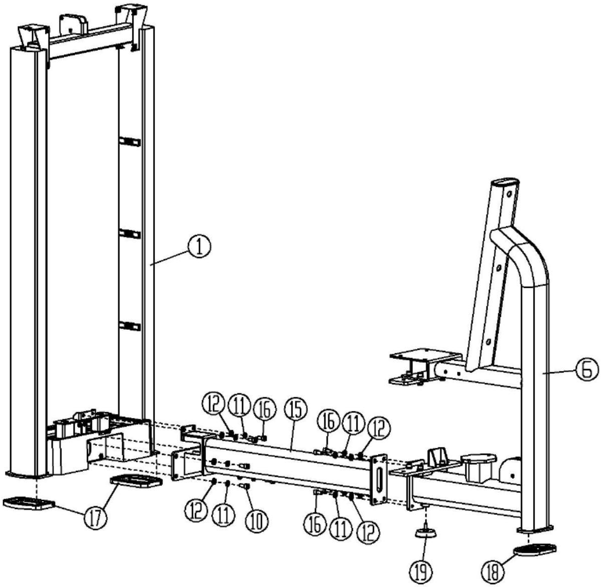

Step 9: Attach the two plug caps-40x80 (#25) and the flat round stop pad (#24)
to the left force arm (#20) on the outside of the thigh

Install the two deep groove ball bearings (#26) and the outer thigh force arm shaft (#27)
into the outer thigh left force arm (#20).

Step 10: Connect the two outer thigh pedal tubes (#21) to the left force arm (#20) using the following method:

- 12 xBlind rivets (#22)

Install the two round tube plug caps (#23) to the left force arm (#20).

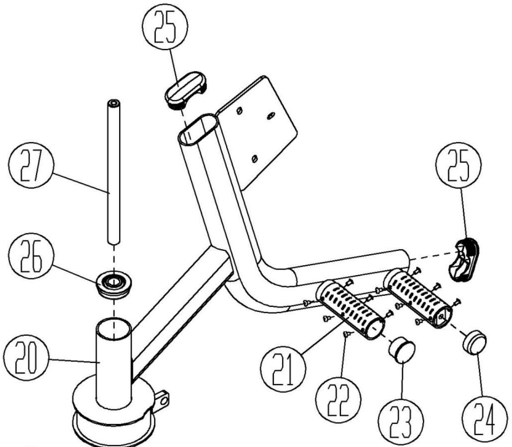

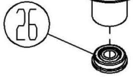

Assemble

Step 11: Connect the left leg pad (#28) to the left force arm (#20) on the outside of the thigh using the following method:
- 3 x Hexagon socket cheese head screws (#29)
- 3 x Spring washers (#30)
- 3 x Flat washer (#31)

Tighten the bolt with a wrench, then proceed to the next step

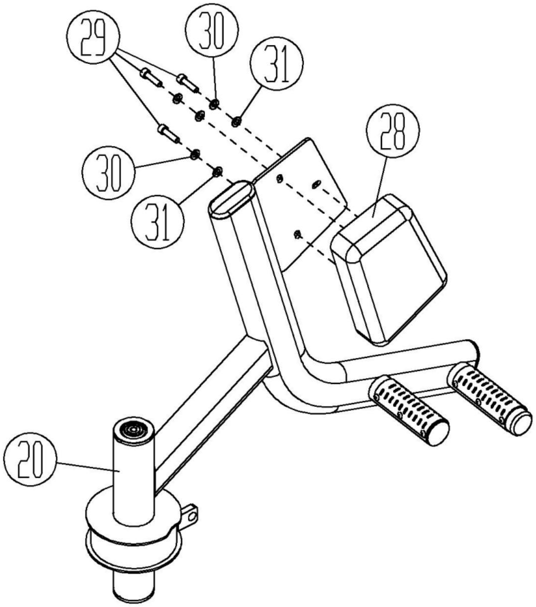

Assemble

Step 12:Install the flat round head stop pad (#24) to the outer thigh flange (#32).
Install the two deep groove ball bearings (#26) into the outer thigh flange (#32)

Step 13: Attach the two universal stop sleeves (#36) and the adjusting shield (#35) to the outer thigh flange (#32)
Connecting
- 2x Hexagon socket cheese head screws (#16)

Tighten the bolt with a wrench, then proceed to the next step

Step 14: Connect the outer thigh bobbin (#33) to the outer thigh flange (#32) using the following method:
- 3x Hexagon socket flat countersunk head screws (#34)

Tighten the bolt with a wrench, then proceed to the next step

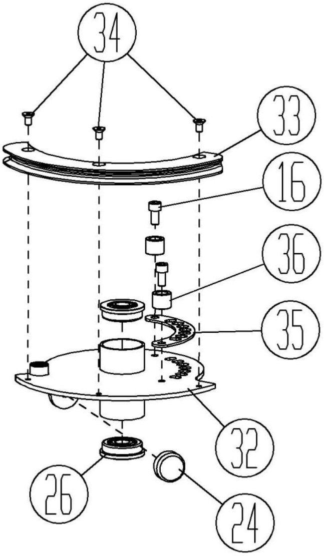

Assemble

Step 15: Attach the two plug caps - 40x80 (#25) and the flat round head stop pad (#24) to the lateral right thigh force arm (#37).

Install the adjusting puller pin (#38), puller pin spring (#39), puller pin bushing bolt (#40), and puller pin handle (#41) to the right force arm (#37) on the outside of the thigh.

Step 16: Connect the two outer thigh pedal tubes (#21) to the right force arm (#37)

- 12 xBlind rivets (#22)

Install the round tube plug cover (#23) to the right force arm (#37).

Step 17: Install two deep groove ball bearings (#26) into the right force arm (#37) on the outside of the thigh

Connect the lateral thigh force arm shaft (#27) to the lateral right thigh force arm (#37) and the lateral thigh flange (#32):

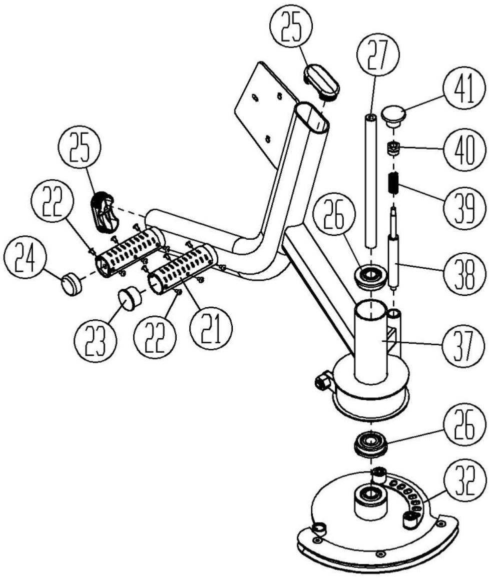

Assemble

Step 18: Connect the lateral right thigh pad (#42) to the lateral right thigh force arm (#37) using the following method:

- 3 x Hexagon socket cheese head screws (#29)
- 3 x Spring washers (#30)
- 3 x Flat washer (#31)

Tighten the bolt with a wrench, then proceed to the next step

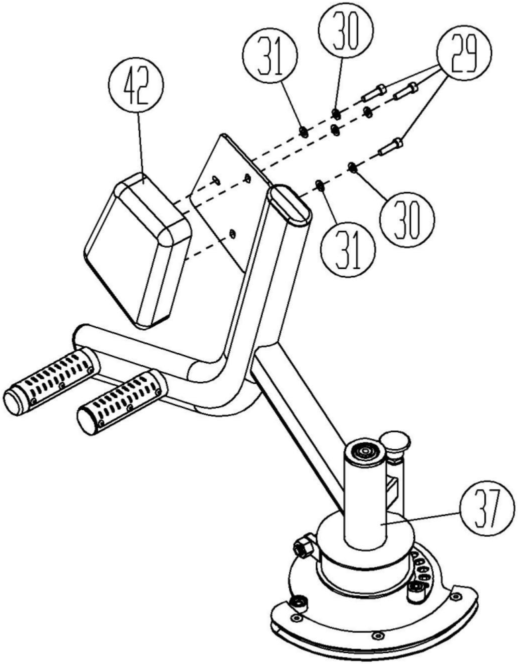

Assemble

Step 19: Place the lateral left thigh force arm (#20) and the lateral right thigh force arm (#37) with the lateral thigh side frame (#6) in the following way

Connecting
- 4 x Hexagon socket cheese head screws (#10)
- 4 x Spring washers (#11)
- 4 x Flat washers (#12)

Tighten the bolt with a wrench, then proceed to the next step

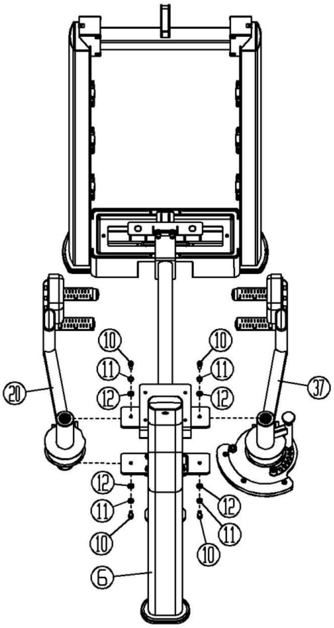

Assemble

Step 20: Place the grip limit ring-33 (#46), the universal grip-100 (#45), and the handle end cap-33 (#46) in the following order
Connect to the Universal Handrail (#43):
- 8 x Tapered head top wire (#47)

Wrench to tighten the top wire, then proceed to the next step

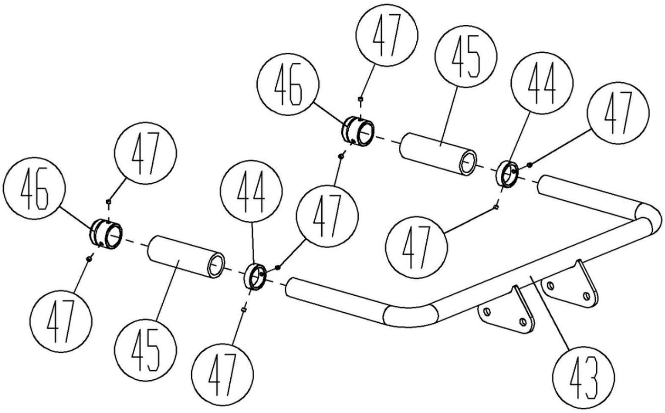

Assemble

Step 21: Connect the Universal Armrest (#43) to the Outer Thigh Frame (#6) using the following method:
- 4 x Hexagon socket cheese head screws (#10)
- 4 x Spring washers (#11)
- 4 x Flat washer (#12)

Tighten the bolt with a wrench, then proceed to the next step

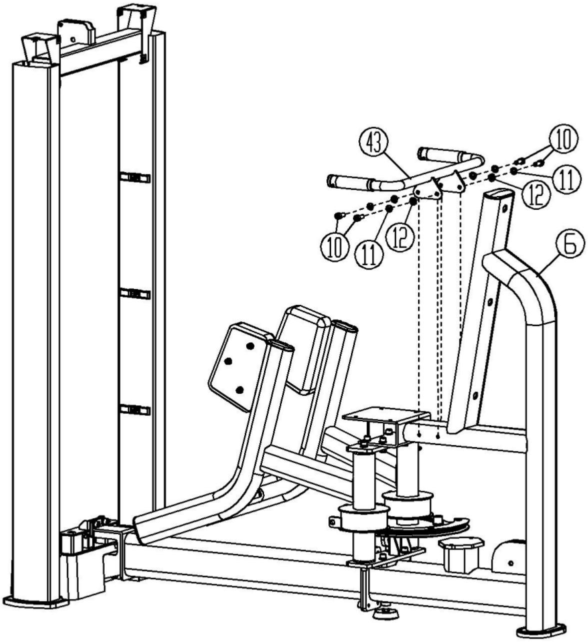

Assemble

Step 22: Attach the back pad (#48) to the outer thigh frame (#6) using the following method:
- 3 x Hexagon socket cheese head screws (#49)

Tighten the bolt with a wrench, then proceed to the next step

Step 23:Install the three hole plugs (#50) to the outer thigh side frame (#6).

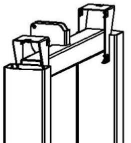

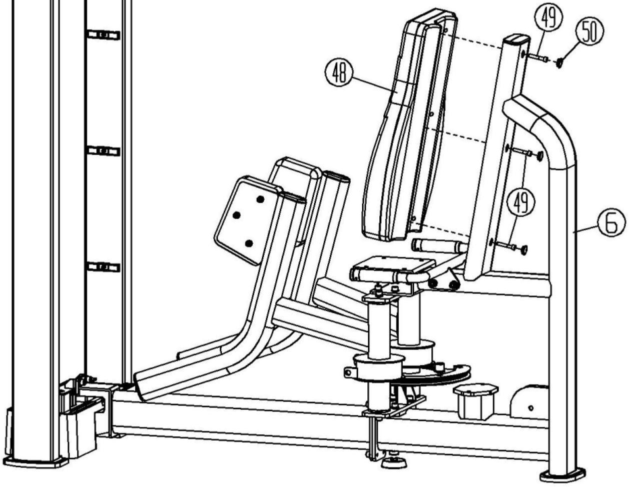

Assemble

Step 24: Attach the cushion (#51) to the outer thigh frame (#6) using the following method:
- 4 x Hexagon socket cheese head screws (#29)
- 4 x Spring washers (#30)
- 4 x Flat washer (#31)

Tighten the bolt with a wrench, then proceed to the next step

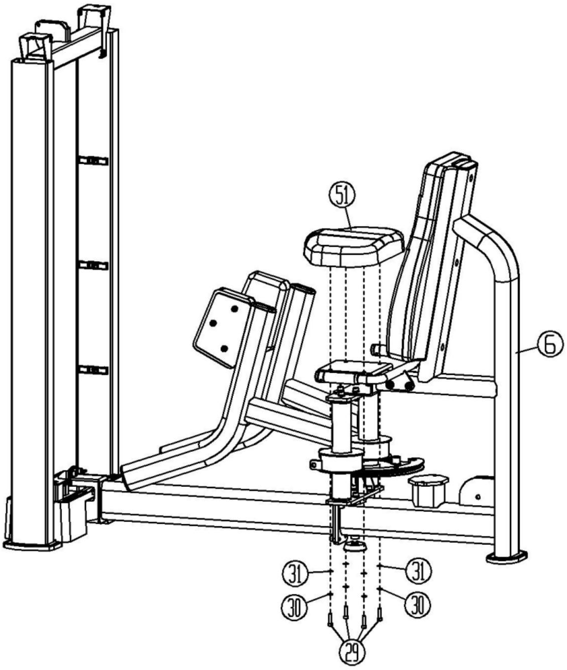

Assemble

Step 25: Connect the two universal guide bushings (#52) to the universal guide block (#53) with the two outer clips (#54).
Connect the counterweight center rod (#55) to the universal guide block (#53) with the guide block flexible cylindrical pin (#56).

Step 26:Install the two counterweight block isolators (#58) to the counterweight block (#57).

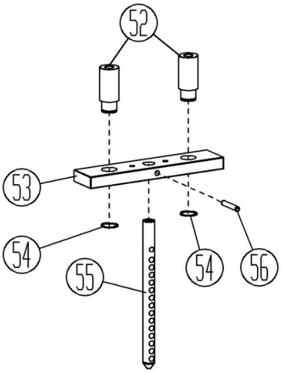

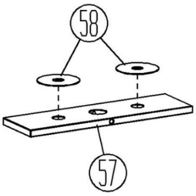

Assemble

Step 27: Slide the two counterweight rubber pads (#60) onto the two guide bars (#59).
Connect the two counterweight bases (#61) to the two guide bars (#59) and place them in the counterweight frame (#1)

- 2 x Hexagon socket cheese head screws (#62)
- 2 x Spring washers (#30)
- 2 x Flat washer (#31)

Tighten the bolt with a wrench, then proceed to the next step

Step 28:Install the 16 counterweights (#57) onto the guide bar (#59) with the isolation tabs facing up.
Install the guide block set (#53) to the guide bar (#59).
Insert the counterweight pin (#64) into the counterweight block (#57)
Slide the guide bar retainer plate (#63) onto the guide bar (#59).
Attach the guide bar fixing plate (#63) to the counterweight frame (#1) using the following method:

- 2 x Hexagon socket cheese head screws (#62)

Tighten the bolt with a wrench, then proceed to the next step

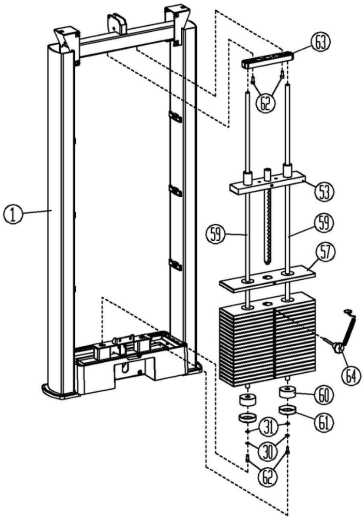

Assemble

Step 29: Connect the two 95 wire wheels (#67) to the counterweight frame (#1) using the following method:

- 2 x Wire spool (#68)
- 2 x Hexagonal self-locking nuts (#13)
- 2 x Flat washers (#69)
- 2 x Flat washers (#12)

Attach the 120 wire reel (#70) to the outer thigh side frame (#6) using the following method:

- 1 x Wire spool (#68)
- 1 x Hexagonal self-locking nuts (#13)
- 1 x Flat washers (#69)
- 1 x Flat washers (#12)

Attach the spool box (#71) and 120 spool (#70) to the outer thigh side frame (#6) using the following method:

- 1 x Wire spool (#82)

Note that these spools are installed in tandem with the wire rope (#65).

Step 30:Attach the chuck end of the wire rope (#65) to the flange (#32) using the following method

- 2 x Flat washers (#72)
- 2 x Inner Card (#73)

Step 31:Attach the hex nut (#66) to the bolt end of the wire rope (#65).
Attach the bolt end of the wire rope (#65) to the center rod (#55).

Step 32: Connect the wire rope II (#74) to the outer thigh left force arm (#20) and the outer thigh right force arm (#37):
Install the four hex nuts (#75) to the ends of the two wire ropes II (#74).

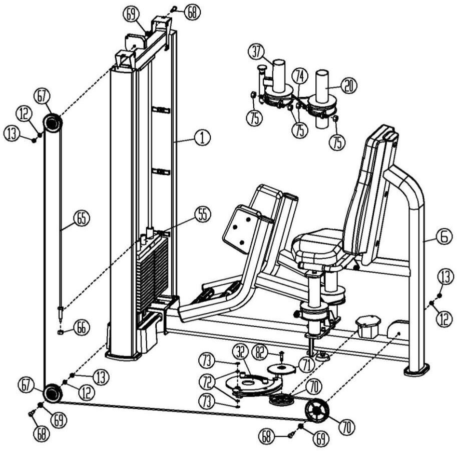

Step 33:Slide the two trim strips (#77) into the two baffles (#76) and attach them to the counterweight frame (#1) using the baffle pressure plate (#2)
Slide the trim plate (#78) into the two baffles (#76) and use the baffle pressure plate (#2) to attach to the counterweight frame (#1).
Attach the two upper shrouds (#79) to the counterweight frame (#1) using the following method:

- 8 xHexagon socket cheese head screws (#3)

Connect the top cover of the upper shroud (#80) to the two upper shrouds (#79).

Connect the two counterweight riser plug caps (#81) to the counterweight frame (#1) using the following meth

- 2 x Hexagon socket cheese head screws (#3)

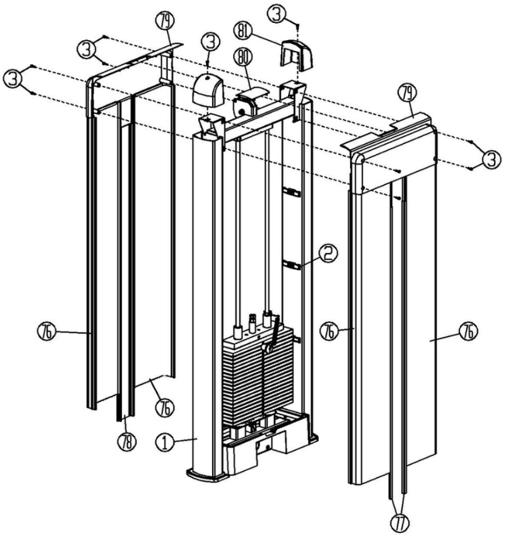

Assemble

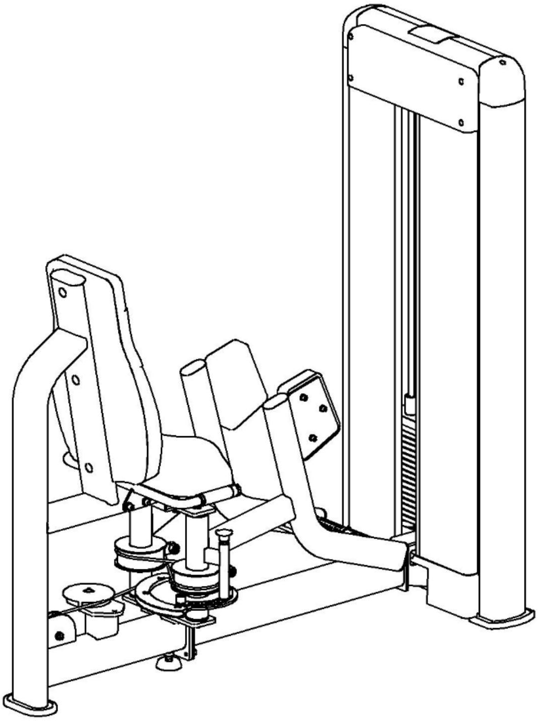

Important Tips

Now that the C1023 is assembled, you will need to take a moment to make sure your unit is level and vertical. Use a level to check that the guide bars are plumb in both directions. If they are not plumb some of the frame hardware must be loosened and the bolts reassembled and tightened.

Accessory List

NO	Name and specification	Quantity
1	Counterweight rack	1
2	Sheathing press plate	6
3	Hexagon socket cheese head screws (M5*16)	18
4	Counterweight lower shroud	1
5	Fast wire clips	10
6	Outer thigh side frame	1
7	Plugging the cap-50x120	1
8	Lateral thigh connector	1
9	Lateral thigh joint plate	1
10	Hexagon socket flat round head screws (M10*25)	16
11	Spring washers (10)	20
12	Flat washers (10)	33
13	Hexagonal self-locking nuts (M10)	7
14	Hexagon socket cheese head screws (M10*30)	4
15	Lateral thigh joint frame	1
16	Hexagon socket cheese head screws (M10*20)	8
17	Counterweight frame foot pads	2
18	Flat Oval Foot Pad	1
19	Movable Foot Pad	1

20	External thigh left force arm	1
21	Outer thigh pedal tube	4

Accessory List

NO	Name and specification	Quantity
22	Blind rivets	24
23	Tube end caps	4
24	Flat round head stop cushion	3
25	Plugging the cap-40x80	4
26	Deep groove ball bearings（YR6004-2RS）	6
27	Lateral thigh force arm axis（ϕ20*310）	2
28	Left leg pad	1
29	Hexagon socket cheese head screws（M8*30）	10
30	Spring washers（8）	12
31	Flat washers（8）	12
32	Flanges	1
33	Outer thigh winding reel	1
34	Hexagon socket flat countersunk head screws（M8*15）	3
35	Adjustment shields	1
36	Universal stop sleeve	2
37	External thigh right force arm	1
38	Lateral thigh adjustment pins	1
39	Pull pin spring	1
40	Pulling pin sleeve bolt	1
41	Draw pin handle	1
42	Right leg pad	1

Accessory List

NO	Name and specification	Quantity
43	Universal armrest	1
44	Grip limit ring-33	2
45	Universal grip-100	2
46	Handlebar end caps-33	2
47	Tapered head top wire（M5*4）	8
48	Back Pad	1
49	Hexagon socket cheese head screws（M8*40）	3
50	20-hole plug	3
51	Cushion	1
52	Universal guide bush	2
53	Universal guide block	1
54	External Card（Φ30*s1.2）	2
55	Counterweight center rod-16 holes	1
56	Guide block flexible cylindrical pin	1
57	Counterweight block	16

58	Counterweight block isolation piece	32
59	Universal counterweight guide bar	2
60	Counterweight rubber pad	2
61	Counterweight stand base	2
62	Hexagon socket cheese head screws（M8*20）	4
63	Guide bar fixed plate	1

Accessory List

NO	Name and specification	Quantity
64	Counterweight pins	1
65	Outer thigh wire rope1	1
66	Hexagonal nuts（M14）	1
67	95 Wire Wheel	2
68	Wire spool-32	3
69	Flat washers（12）	3
70	120 wire wheels	2
71	Wire wheel box	1
72	Small washers（10）	2
73	Inner Card（Φ20*S1）	2
74	Outer thigh wire rope 2	2
75	Hexagonal nuts（M16）	4
76	Baffle	4
77	Counterweight source decorative strip	2
78	Counterweight source decorative plate	1
79	Counterweight upper shroud	2
80	Top cover of upper shroud	1
81	Counterweight riser plug cap	2
82	Wire spool-25	1