# 61A22 Installation Guide

## Inner Thigh Adductor

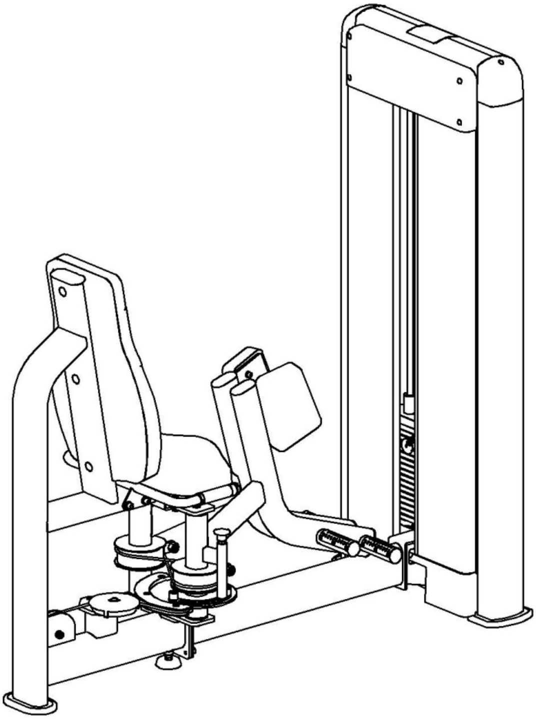

## Catalog

Introduction ………………………………………………………… 2

Assemble ………………………………………………………… 3

Accessory List ………………………………………………………… 21

# Introduction

Please take the time to read these instructions carefully before installation. Please refer to the list in the manual to confirm the completeness and quantity of all parts (if any parts are missing or damaged in transit, please call our company immediately for after-sales instructions) When installing the equipment, please follow the instructions for proper installation.

This equipment is designed to provide the most smoothly and effective exercise. After installation, you need to understand all the functions in order to use correctly. If problems found when use, you should immediately stopto avoid physical injury and equipment damage. And timely refer to the relevant instructions to inquire about the cause, if you can not solve please call the company after-sales. After carefully reading all the instructions, please continue

Rubber Sticks
Level Ruler
Hexagonal wrench
Two people
Spring Clamp
Adjustable wrench

# Assemble

Step 1: Connect the guard pressure plate (#2) to the counterweight frame (#1) with the following method:
- 6 x Hexagon socket cheese head screws (#3)

Step 2: Connect the counterweight lower shield (#4) to the counterweight frame (#1) using the following method:
- 2 x Hexagon socket cheese head screws (#3)

Step 3: Install ten quick wire clips (#5) to the counterweight frame (#1)

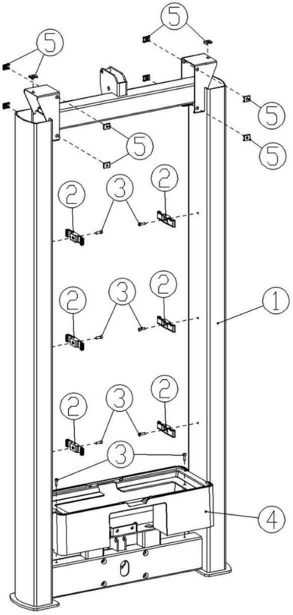

## Assemble

Step 4: Install the plug cover-50x120 (#7) to the inner thigh side frame (#6)

Step 5: Connect the inner thigh connector (#8) to the inner thigh side frame (#6) using the following method:

- 4 xHexagon socket flat round head screws (#10)
- 4 x Spring washers (#11)
- 4 x Flat washer (#12)

Tighten the bolt with a wrench, then proceed to the next step

Step 6: Connect the inner thigh attachment plate (#9) to the inner thigh side frame (#6) using the following method:

- 4 xHexagon socket cheese head screws (#14)
- 4 x Hexagonal self-locking nuts (#13)
- 8 x Flat washers (#12)

Tighten the bolt with a wrench, then proceed to the next step

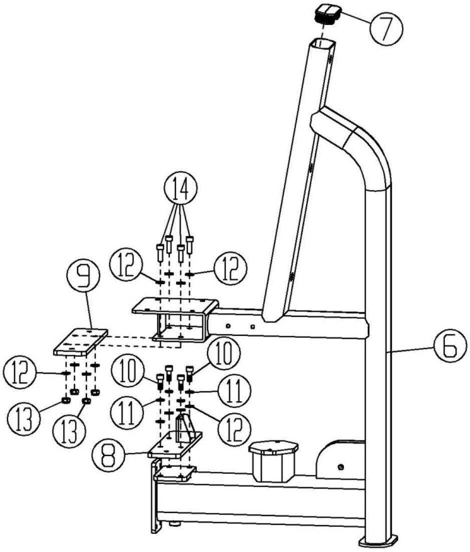

# Assemble

Step 7: Connect the inner thigh attachment bracket (#15) to the counterweight bracket (#1) and inner thigh side bracket (#6)

- 6 x Hexagon socket cheese head screws (#16)
- 4 x Hexagon socket cheese head screws (#10)
- 10 x Spring washers (#11)
- 10 x Flat washers (#12)

Tighten the bolt with a wrench, then proceed to the next step

Step 8: Install the two counterweight frame feet (#17) to the counterweight frame (#1)
Install flat oval foot pad (#18) and movable foot pad (#19) to inner thigh side frame (#6)

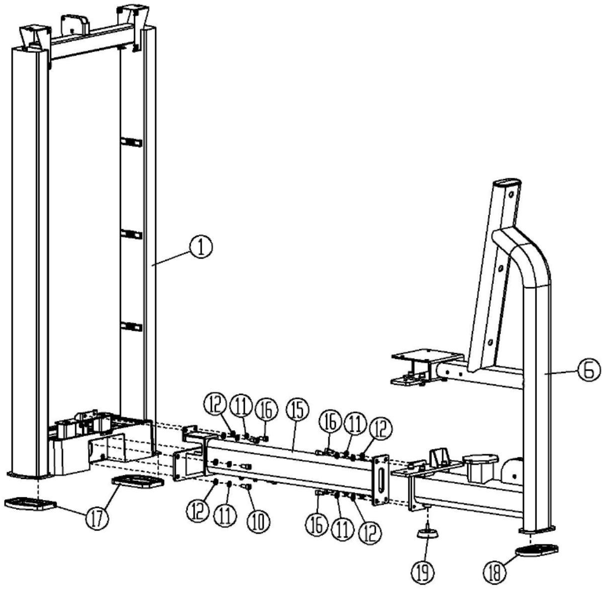

# Assemble

Step 9: Attach two plug caps - 40x80 (#25) and flat head stop pads (#24) to the inner thigh left force arm (#20)
Install the two deep groove ball bearings (#26) and the inner thigh force arm shaft (#27)

Step 10: Connect the two inner thigh pedal tubes (#21) with the left force arm (#20) using the following method:

- 12 xBlind Rivets (#22)

Install two round tube plug caps (#23) to the left force arm (#20)。

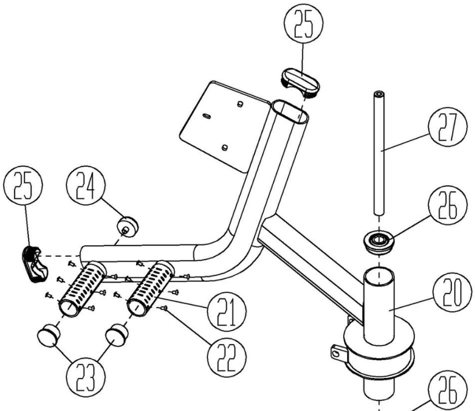

# Assemble

Step 11: Connect the inner thigh left leg pad (#28) to the left force arm (#20) using the following method:
- 3 x Hexagon socket cheese head screws (#29)
- 3 x Spring washers (#30)
- 3 x Flat washer (#31)

Tighten the bolt with a wrench, then proceed to the next step

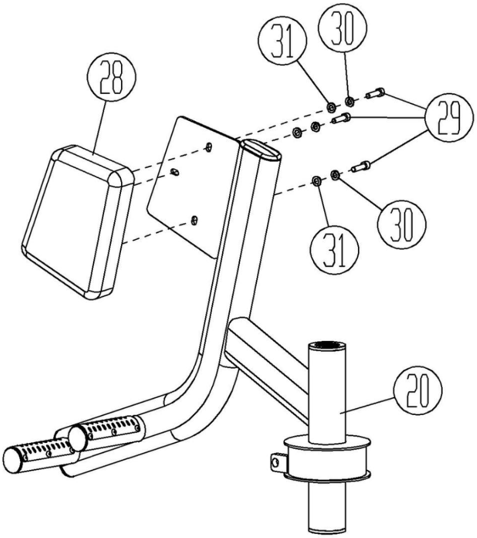

# Assemble

Step 12:Install the flat round head stop pad (#24) to the inner thigh flange (#32).
Install the two deep groove ball bearings (#26) into the inner thigh flange (#32).

Step 13: Attach the two universal stop sleeves (#36) and the adjusting shield (#35) to the inner thigh flange (#32) using the following method

Connections:
- 2x Hexagon socket cheese head screws (#16)

Tighten the bolt with a wrench, then proceed to the next step

Step 14: Connect the inner thigh bobbin (#33) to the inner thigh flange (#32) using the following method:
- 3x Hexagon socket flat countersunk head screws (#34)

Tighten the bolt with a wrench, then proceed to the next step

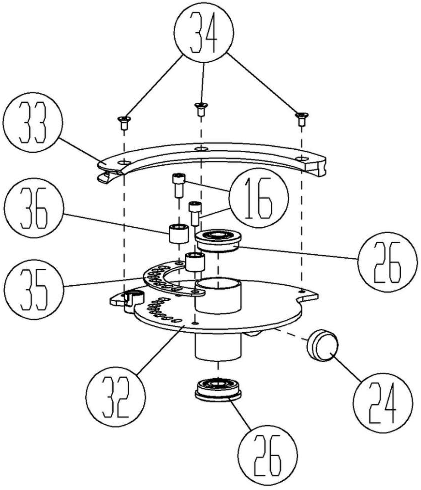

# Assemble

Step 15: Attach the two plug caps - 40x80 (#25) and the flat round head stop pad (#24) to the inner thigh right force arm (

Install the adjustment puller pin (#38), puller pin spring (#39), puller pin bushing bolt (#40),
and puller pin handle (#41) to the inner thigh right force arm (#37).

Step 16: Connect the two inner thigh pedal tubes (#21) to the right force arm (#37) using the following method:

- 12 x抽芯铆钉（#22）

Install the two round tube plug caps (#23) to the right force arm (#37).

Step 17: Install the two deep groove ball bearings (#26) into the inner thigh right force arm (#37)
Connect the medial thigh force arm shaft (#27) to the medial right thigh force arm (#37) and the medial thigh flange (#32):

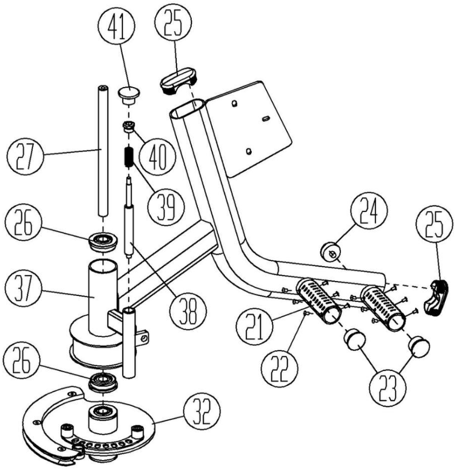

# Assemble

Step 18: Connect the inner right thigh pad (#42) to the inner right thigh force arm (#37) using the following method:

- 3 x Hexagon socket cheese head screws (#29)
- 3 x Spring washers (#30)

- 3 x Flat washers (#31)

Tighten the bolt with a wrench, then proceed to the next step

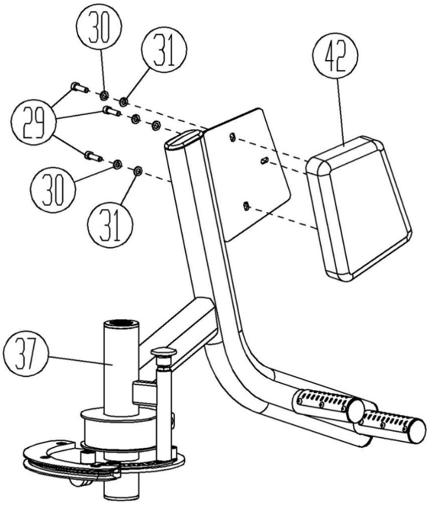

# Assemble

Step 19: Place the medial thigh left force arm (#20) and medial thigh right force arm (#37) with the medial thigh side frame (#6) in the following

Connections:

- 4 x Hexagon socket cheese head screws (#10)
- 4 x Spring washers (#11)
- 4 x Flat washers (#12)

Tighten the bolt with a wrench, then proceed to the next step

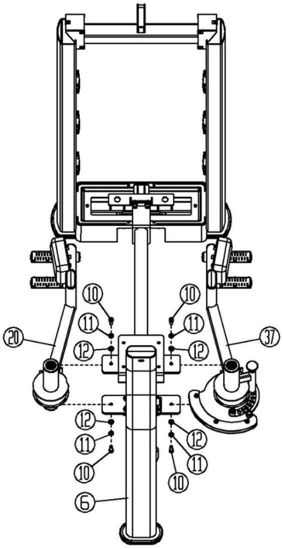

# Assemble

Step 20: Place the grip limit ring-33 (#46), the universal grip-100 (#45), and the handle end cap-33 (#46) in the following order
Connect to the universal armrest（#43）：
- 8 xTaper head top wire（#47）

Wrench to tighten the top wire, then proceed to the next step

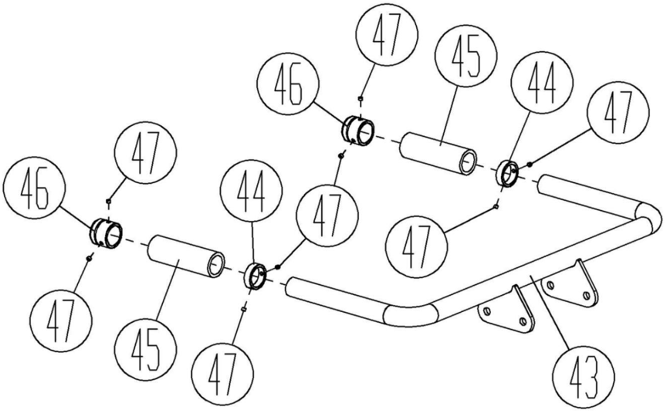

# Assemble

Step 21: Connect the Universal Armrest (#43) to the Inner Thigh Frame (#6) using the following method:
- 4 x Hexagon socket cheese head screws（#10）
- 4 x Spring washers（#11）
- 4 x Flat washers（#12）

Tighten the bolt with a wrench, then proceed to the next step

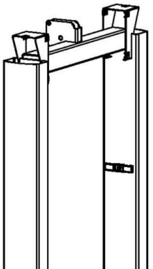

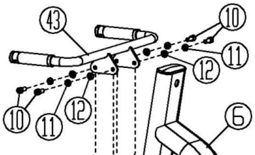

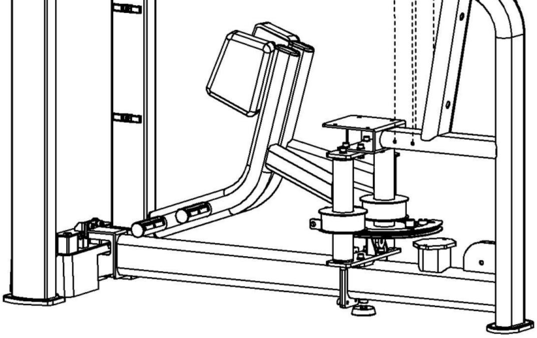

## Assemble

Step 22: Attach the back pad (#48) to the inner thigh frame (#6) using the following method:

- 3 x Hexagon socket cheese head screws (#49)

Tighten the bolt with a wrench, then proceed to the next step

Step 23: Attach the three hole plugs (#50) to the inner thigh side frame (#6)。

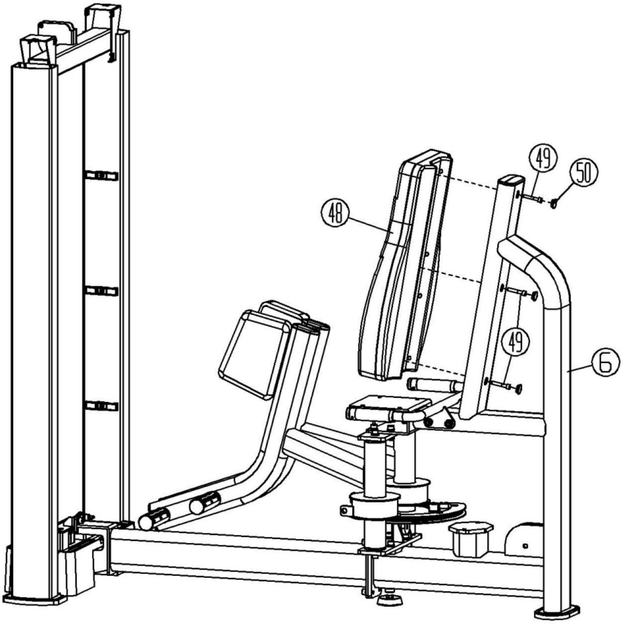

## Assemble

Step 24: Connect the cushion (#51) to the inner thigh frame (#6) using the following method:

- 4 x Hexagon socket cheese head screws (#29)
- 4 x Spring washers (#30)
- 4 x Flat Washer (#31)

Tighten the bolt with a wrench, then proceed to the next step

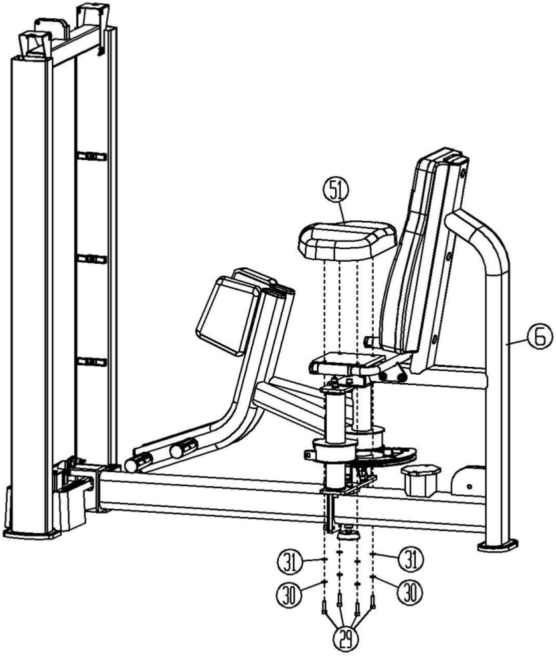

Step 25: Connect the two universal guide bushings (#52) to the universal guide block (#53) with the two outer clips (#54). Connect the counterweight center rod (#55) to the universal guide block (#53) with the guide block flexible cylindrical pin (#56).

Step 26:Install the two counterweight block isolators (#58) to the counterweight block (#57).

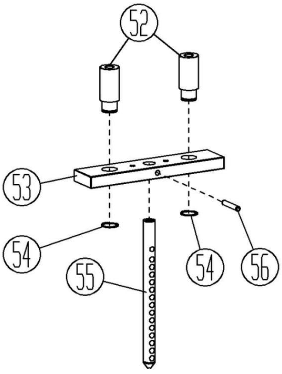

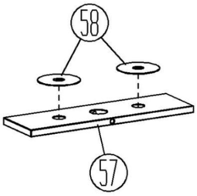

Step 27: Slide the two counterweight rubber pads (#60) onto the two guide bars (#59).
Connect the two counterweight bases (#61) to the two guide bars (#59) and place them in the counterweight frame (#1)

- 2 x Hexagon socket cheese head screws (#62)
- 2 x Spring washers (#30)
- 2 x Flat washers (#31)

Tighten the bolt with a wrench, then proceed to the next step

Step 28:Install the 16 counterweights (#57) onto the guide bar (#59) with the isolation tabs facing up.
Install the guide block set (#53) to the guide bar (#59).
Insert the counterweight pin (#64) into the counterweight block (#57).
Slide the guide bar retainer plate (#63) onto the guide bar (#59).
Attach the guide bar fixing plate (#63) to the counterweight frame (#1) using the following method:

- 2 x Hexagon socket cheese head screws (#62)

Tighten the bolt with a wrench, then proceed to the next step

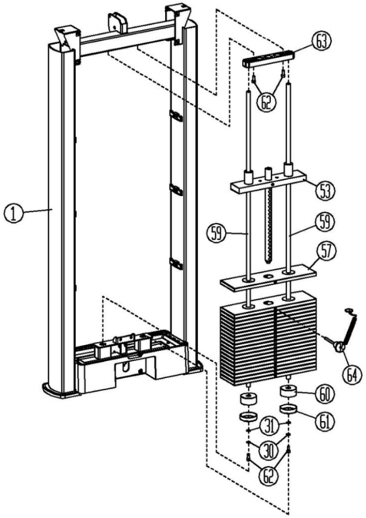

# Assemble

Step 29: Connect the two 95 wire wheels (#67) to the counterweight frame (#1) using the following method:

- 2 x Wire spool (#68)
- 2 x Hexagonal self-locking nuts (#13)
- 2 x Flat washers (#69)
- 2 x Flat washers (#12)

Attach the 120 wire reel (#70) to the inner thigh side frame (#6) using the following method:

- 1 x Wire spool (#68)
- 1 x Hexagonal self-locking nuts (#13)
- 1 x Flat washers (#69)
- 1 x Flat washers (#12)

Attach the spool box (#71) and 120 spool (#70) to the inner thigh side frame (#6) using the following method:

- 1 x Wire spool (#82)

Note that these spools are installed in tandem with the wire rope (#65).

Step 30:Attach the chuck end of the wire rope (#65) to the flange (#32) using the following method

- 2 x Flat washers (#72)
- 2 x Inner card (#73)

Step 31:Attach the hex nut (#66) to the bolt end of the wire rope (#65).
Attach the bolt end of the wire rope (#65) to the center rod (#55).

Step 32: Connect the wire rope II (#74) to the inner thigh left force arm (#20) and inner thigh right force arm (#37):
Install the four hex nuts (#75) to the ends of the two wire ropes II (#74).

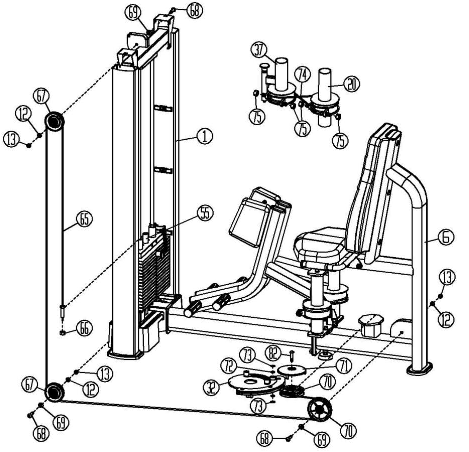

Step 33:Slide the two trim strips (#77) into the two baffles (#76) and attach them to the counterweight frame (#1) using the baffle pressure plate (#2).

Slide the trim plate (#78) into the two baffles (#76) and use the baffle pressure plate (#2) to attach to the counterweight frame (#1).
Attach the two upper shrouds (#79) to the counterweight frame (#1) using the following method:
- 8 x Hexagon socket cheese head screws（#3）

Connect the top cover of the upper shroud (#80) to the two upper shrouds (#79).

Connect the two counterweight riser plug caps (#81) to the counterweight frame (#1) using the following method:
- 2 x Hexagon socket cheese head screws（#3）

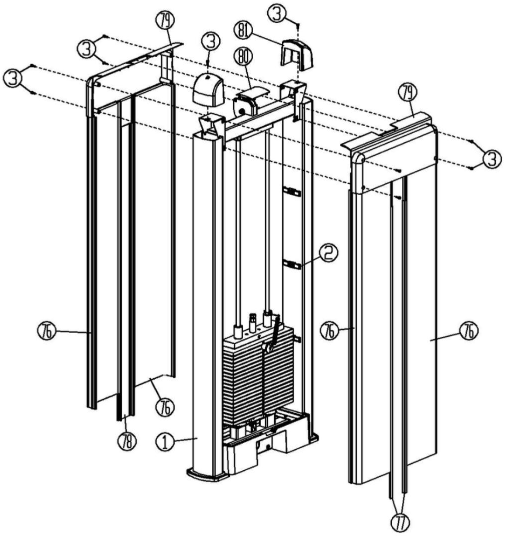

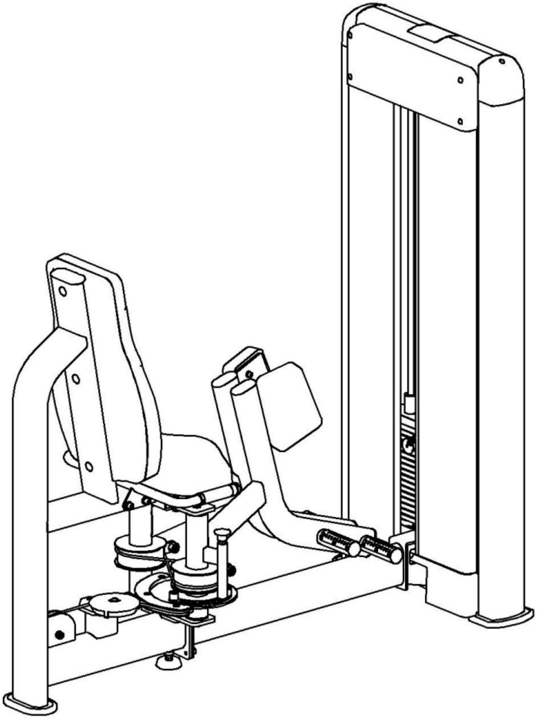

**Important Tips**

Now that the C1022 is assembled, you will need to take a moment to make sure your unit is level and vertical. Use a level to check that the guide bars are plumb in both directions. If they are not plumb some of the frame hardware must be loosened and the bolts reassembled and tightened.

## Accessory List

| No. | Name and specification | Quantity |
|---|---|---|
| 1 | Counterweight rack | 1 |
| 2 | Sheathing pressure plate | 6 |
| 3 | Hexagon socket cheese head screws（M5*16） | 18 |
| 4 | Counterweight lower shroud | 1 |
| 5 | Fast wire clips | 10 |
| 6 | Inner thigh side shelf | 1 |
| 7 | Plugging the cap-50x120 | 1 |
| 8 | Inner thigh joint | 1 |
| 9 | Inner thigh joint plate | 1 |
| 10 | Hexagon socket flat round head screws（M10*25） | 16 |
| 11 | Spring washers（10） | 20 |
| 12 | Flat washers（10） | 33 |
| 13 | Hexagonal self-locking nuts（M10） | 7 |
| 14 | Hexagon socket cheese head screws（M10*30） | 4 |
| 15 | Inner thigh joint frame | 1 |
| 16 | Hexagon socket cheese head screws（M10*20） | 8 |
| 17 | Counterweight frame foot pads | 2 |
| 18 | Flat Oval Foot Pad | 1 |

| | | |
|---|---|---|
| 19 | Movable Foot Pad | 1 |
| 20 | Left inner thigh force arm | 1 |
| 21 | Inner thigh pedal tube | 4 |

## Accessory List

| No. | Name and specification | quantity |
|---|---|---|
| 22 | Blind rivets | 24 |
| 23 | Tube end caps | 4 |
| 24 | Flat round head stop cushion | 3 |
| 25 | Plugging the cap-40x80 | 4 |
| 26 | Deep groove ball bearing（YR6004-2RS） | 6 |
| 27 | Inner thigh force arm axis（φ20*310） | 2 |
| 28 | Left leg pad | 1 |
| 29 | Hexagon socket cheese head screws（M8*30） | 10 |
| 30 | Spring washers（8） | 12 |
| 31 | Flat washers（8） | 12 |
| 32 | Flanges | 1 |
| 33 | Inner thigh winding reel | 1 |
| 34 | Hexagon socket flat countersunk head screws（M8*15） | 3 |
| 35 | Adjustment shields | 1 |
| 36 | Universal stop sleeve | 2 |
| 37 | Inner thigh right force arm | 1 |
| 38 | Inner thigh adjustment pins | 1 |
| 39 | Pull pin spring | 1 |
| 40 | Pulling pin sleeve bolt | 1 |
| 41 | Draw pin handle | 1 |
| 42 | Right leg pad | 1 |

## Accessory List

| No. | Name and specification | quantity |
|---|---|---|
| 43 | Universal armrest | 1 |
| 44 | Grip limit ring-33 | 2 |
| 45 | Universal grip-100 | 2 |
| 46 | Handlebar end caps-33 | 2 |
| 47 | Tapered head top wire（M5*4） | 8 |
| 48 | Back Pad | 1 |
| 49 | Hexagon socket cheese head screws（M8*40） | 3 |
| 50 | 20-hole plug | 3 |
| 51 | Cushion | 1 |
| 52 | Universal guide bush | 2 |
| 53 | Universal guide block | 1 |
| 54 | External Card（Φ30*s1.2） | 2 |

| | | |
|---|---|---|
| 55 | Counterweight center rod-16 holes | 1 |
| 56 | Guide block flexible cylindrical pin | 1 |
| 57 | Counterweight block | 16 |
| 58 | Counterweight block isolation piece | 32 |
| 59 | Universal counterweight guide bar | 2 |
| 60 | Counterweight rubber pad | 2 |
| 61 | Counterweight stand base | 2 |
| 62 | Hexagon socket cheese head screws (M8*20) | 4 |
| 63 | Guide bar fixing plate | 1 |

# Accessory List

| No. | Name and specification | Quantity |
|---|---|---|
| 64 | Counterweight pins | 1 |
| 65 | Inner thigh wire rope 1 | 1 |
| 66 | Hexagonal nut (M14) | 1 |
| 67 | 95 Wire Wheel | 2 |
| 68 | Wire spool-32 | 3 |
| 69 | Flat washers (12) | 3 |
| 70 | 120 wire wheels | 2 |
| 71 | Wire wheel box | 1 |
| 72 | Small washers (10) | 2 |
| 73 | Inner card (Φ20*S1) | 2 |
| 74 | Inner thigh wire rope 2 | 2 |
| 75 | Hexagonal nuts (M16) | 4 |
| 76 | Baffle | 4 |
| 77 | Counterweight source decorative strip | 2 |
| 78 | Counterweight source decorative plate | 1 |
| 79 | Counterweight upper shroud | 2 |
| 80 | Upper shroud top cover | 1 |
| 81 | Counterweight riser plug cap | 2 |
| 82 | Wire spool-25 | 1 |