61A03 Installation Guide

Laterial Raise

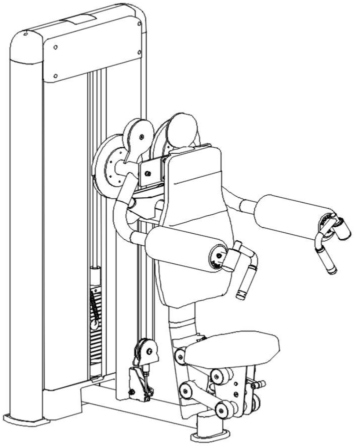

Catalog

Introduction ………………………………………………… 2

Assembling ………………………………………………… 3

Accessory List ………………………………………………… 15

Introduction

Please take the time to carefully read the instructions before installing .Please refer to the manual to determine the list of all components were packaged well.（If there have some parts missed or damaged please immediately call our customer service department）Please refer to the installation instruction while installing.

This device designed to provide the most effective and smoothest training movements. After installing，you can only know how to use the products after you know all the functions. If there is any question， please check the installation insturction and find out the wrong steps during the installing. If still not work, please contact the distributors authorised by original factory. The code and manual will be needed.

Tools

Rubber Rod
Level Ruler
Hexagonal wrench
More than 2 person
Spring Clamp
Adjustable wrench

Assembling

Step 1: Connect the seated side shoulder raise side rack (#2) to the counterweight rack (#1) with the following:
- 4 x Hexagon socket cheese head screws (#3)
- 4 x Spring washers (#4)
- 4 x Flat washers (#5)

Step 2: Connect the counterweight lower shield (#6) to the counterweight frame (#1) using the following method.
- 2 x Hexagon socket cheese head screws (#7)

Step 3: Install the 2 counterweight frame feet (#8) to the counterweight frame (#1)
Install 1 flat oval foot pad (#9) to the seated shoulder side up side rack (#2)

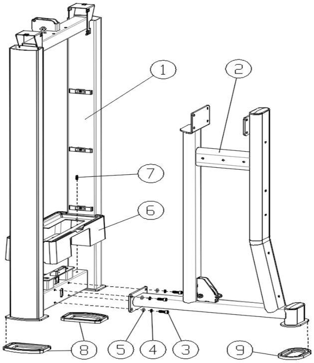

Assembling

(Step 4: Attach the upper pulley bracket assembly (#10) to the seated shoulder side lift side bracket #2) using the following method:
- 6 x Hexagon socket cheese head screws (#11)
- 6 x Spring washers (#4)
- 6 x Flat washers (#5)

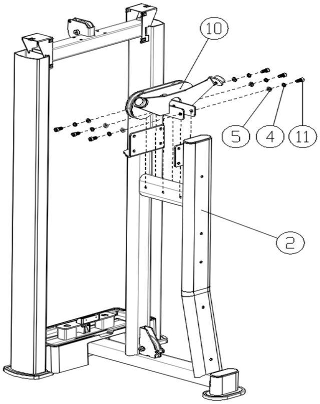

Assembling

Step 5: Connect the 2-piece attachment plate (#12) to the seated shoulder raise side frame (#2) using the following method.
- 8 x Hexagon socket cheese head screws (#11)
- 8 x Spring washers (#4)
- 8 x Flat washers (#5)

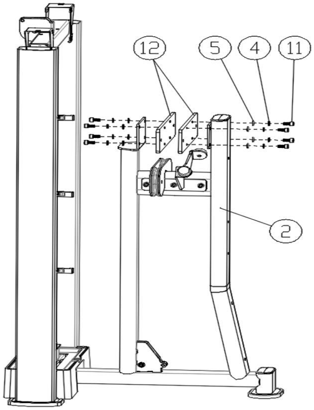

Assembling

Step 6: Connect the cushion (#13) to the seat frame (#14) using the following method.
- 4 x Hexagon socket cheese head screws (#15)
- 4 x Spring washers (#16)
- 4 x Flat washers (#17)

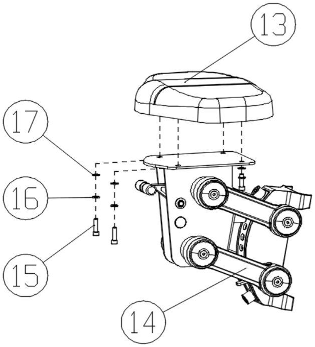

Assembling

Step 7: Connect the seat frame (#14) to the seated shoulder lift side frame (#2) using the following method.
- 2 x Hexagon socket cheese head screws (#18)
- 2 x Spring washers (#4)
- 2 x Flat washers (#5)

Step 8: Attach the back pad (#19) to the seated side shoulder lift side brace (#2) using the following method
- 3 x Hexagon socket cheese head screws (#20)
- 3 x Flat washers (#17)

Attach the 3 hole plug (#21) to the seated shoulder side up side rack (#2)

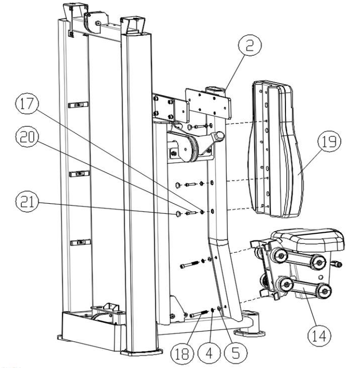

Assembling

Step 9: Connect the bobbin I (#23) to the seated shoulder raise arm (#22) using the following method
- 6 x Hexagon socket cheese head screws (#20)
- 6 x Spring washers (#16)
- 6 x Flat washers (#17)

Note: The correct relative position of the winding disc Ⅰ (#23) and the force arm is shown in the figure

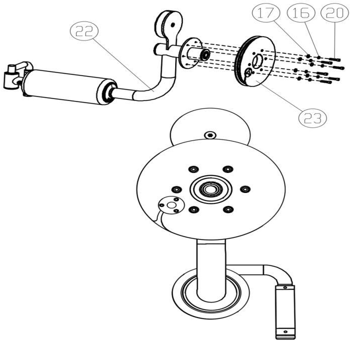

Assembling

Step 10: Wrap the bobbin II (#24) with the seated shoulder raise arm (#22) in the following way
- 6 x Hexagon socket cheese head screws (#20)
- 6 x Spring washers (#16)
- 6 x Flat washers (#17)

Note: The correct relative position of the winding disc II (#24) and the force arm is shown in the figure

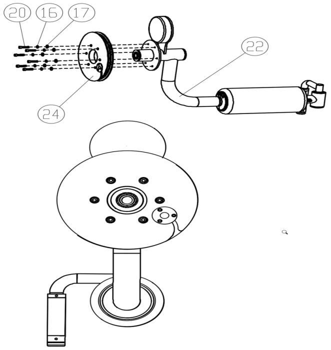

Assembling

Step 11: Connect the bobbin I assembly (#23/#22), the seated shoulder thrust arm shaft (#25) and the seated shoulder lift side bracket (#2) in the following way.
- 2 x Hexagon socket cheese head screws（#3）
- 2 x Spring washers（#4）　　• 2 x Flat washers（#5）

Step 12: Connect the bobbin II assembly (#24/#22), the seated shoulder thrust arm shaft (#25) and the seated shoulder lift side bracket (#2) in the following way.
- 2 x Hexagon socket cheese head screws（#3）
- 2 x Spring washers（#4）　　• 2 x Flat washers（#5）

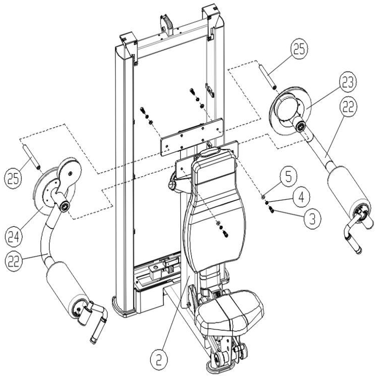

Assembling

Step 13: Slide the two counterweight rubber pads (#27) onto the two guide bars (#26).
Connect the two counterweight bases (#28) to the two guide bars (#26) and place them in the counterweight frame (#1) using the following method.
- 2 x Hexagon socket cheese head screws（#29）
- 2 x Spring washers（#16）　　• 2 x Flat washers（#17）

Tighten the bolt with a wrench, then proceed to the next step

Step 14: Install the 12 counterweights (#30) onto the guide bar (#26) with the isolation tabs facing up.
Install the guide block set (#31) to the guide bar (#26).
Insert the counterweight block pin (#33) into the counterweight block (#30).
Slide the guide bar retainer plate (#32) onto the guide bar (#26).
Install the guide bar fixing plate (#32) to the counterweight frame (#1) using the following method:
- 2 x Hexagon socket cheese head screws（#29）

Tighten the bolt with a wrench, then proceed to the next step

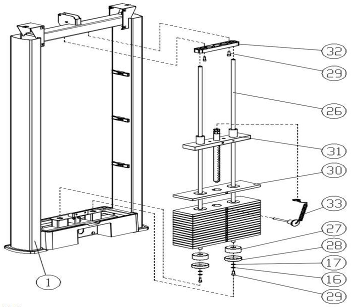

Assembling

Step 15: Thread the wire rope Ⅰ（#35）as shown, the pre-assembled wire sheaves need to be disassembled first and then reassembled
Pay attention to these wire sheaves and wire rope Ⅰ（#35）synchronous installation
Steel wire ropeⅠ（#35）connect the two ends of the winding reel separatelyⅠ（#23）and winding wire
Connect the two ends of wire rope Ⅰ（#35）to winding reel Ⅰ（#23）and winding reel Ⅱ（#24）respectively
Step 16:Thread the wire rope II (#36) as shown, the pre-assembled wire reel needs to be disassembled and then reassembled.
Note that these spools are installed synchronously with wire rope II (#36)
Connect one end of the wire rope II (#36) to the branch sheave box (#34) first, and then connect the other end to the counterweight frame (#1)

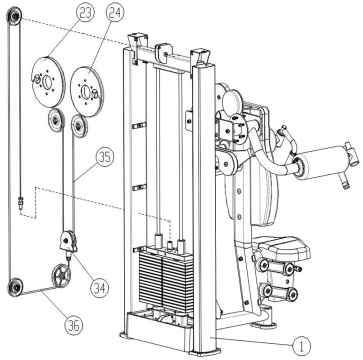

Assembling

Step 17:Slide the two trim strips (#38) into the two baffles (#37) and attach to the counterweight frame (#1) using the baffle pressure plate.
Slide the trim plate (#39) into the two baffles (#37) and attach to the counterweight frame (#1) using the baffle pressure plate.
Attach the two upper shrouds (#40) to the counterweight frame (#1) using the following method.

- 8 x Hexagon socket cheese head screws (#7)

Step 18: Connect the two counterweight riser plugs (#41) to the counterweight frame using the following method
(#1) :

- 2 x Hexagon socket cheese head screws (#7)

Step 19: Snap the upper shroud top cover (#42) to the upper shroud (#40)

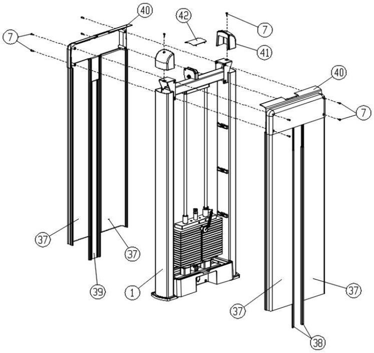

Assembling

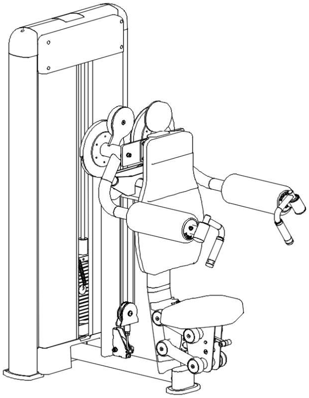

Important Tips

Now that the Lateral Raise is assembled, you need to take a moment to make sure your unit is horizontal and vertical. Use a level to check that the guide bar is vertical in both directions. If they are not vertical some of the frame hardware must be loosened and the bolts reassembled and tightened.

Accessory List

NO	Name and specification	Quantity
1	Counterweight rack	1
2	raises side rack	1
3	Hexagon socket cheese head screws（M10*25）	8
4	Spring washers（10）	24
5	Flat washers（10）	24
6	Counterweight lower shroud	1
7	Hexagon socket cheese head screws（M5*16）	12
8	Counterweight frame foot pads	2
9	Flat Oval Footbed	1
10	Upper Pulley Bracket Assembly	1
11	Hexagon socket cheese head screws（M10*20）	14
12	Seated Shoulder Lateral Raise Connection Plate	2
13	Cushion	1
14	Seat frame	1
15	Hexagon socket cheese head screws（M8*25）	4
16	Spring washers（8）	18
17	Flat washers（8）	21
18	Hexagon socket cheese head screws（M10*70）	2
19	Back Pad	1
20	Hexagon socket cheese head screws（M8*35）	15
21	20-hole plug	3

Accessory List

NO	Name and specification	Quantity
22	Seated Shoulder Lateral Raise Power Arm	2
23	SpoolingⅠ	1
24	SpoolingⅡ	1
25	Seated shoulder thrust arm shaft	2
26	Universal counterweight guide rod	2
27	Counterweight rubber pad	2
28	Counterweight stand base	2
29	Hexagon socket cheese head screws（M8*20）	4
30	Counterweight block	12
31	Guide block set	1
32	Guide bar fixed plate	1
33	Counterweight pins	1
34	Spur wheel box	1
35	CableⅠ	1
36	CableⅡ	1
37	Baffle	4
38	Counterweight source decorative strip	2
39	Counterweight source decorative strip	1
40	Counterweight upper shield	2
41	Counterweight riser plug cover	2
42	Upper shroud top cover	1

Note: Pre-assembled parts are not listed in this table.