55A03 Installation Guide

Pec Deck / Rear Delt

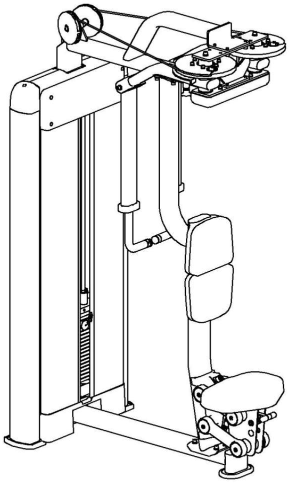

Catalogue

Brief ………………………………………… 2

Installation ………………………………………… 3

Accessories List ………………………………………… 17

Briefs

Please take the time to carefully read the instructions before installing .Please refer to the manual to determine the list of all components were packaged well. （If there have some parts missed or damaged please immediately call our customer service department）Please refer to the installation instruction while installing.

This device designed to provide the most effective and smoothest training movements. After installing, you can only know how to use the products after you know all the functions. If there is any question, please check the installation insturction and find out the wrong steps during the installing. If still not work, please contact the distributors authorised by original factory. The code and manual will be needed.

Tools

Rubber stick

Levelling instrument

Socket head screw wrench

More than 2 person

The adjustable wrench

Installation

Step 1:Use the below ways to connect the connection frame with Balance weight frame
- 4 x Hexagon socket head screws with cylindrical head (#3)
- 4 x Spring washer (#4)
- 4 x Plain washer (#5)

Step 2:Use the below ways to connect the Lower guard(#6) with Balance weight frame (#1)
- 2 x Hexagon socket head screws with cylindrical head (#7)

Step 3:Install two Balance weight frame footpads (#8) to Balance weight frame (#1)
Install Flat oval pad(#9) to connection frame of PECTORAL FLY/REAR DEILOID (#2)

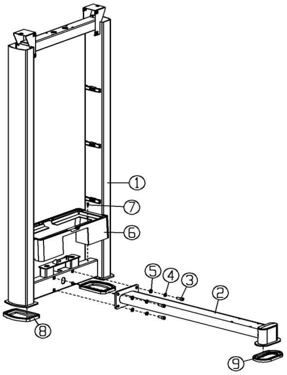

Installation

Step 4:Use the below ways to connect the Side frame I(#10) with Side frame II(#2)

- 4 x Hexagon socket head screws with cylindrical head (#3)
- 4 x Spring washer (#4)
- 4 x Plain washer (#5)

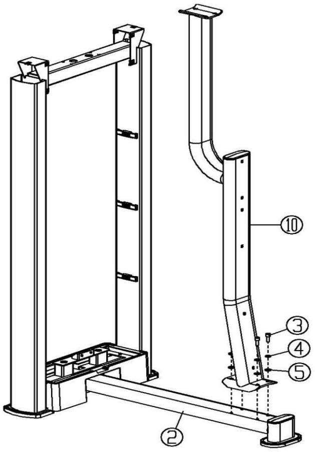

Installation

Step 5:Use the below ways to connect the two Pressure plate(#12) with Side frame II(#11)
Pick up:
- 8 x Hexagon socket head screws with cylindrical head (#3)
- 8 x Spring washer (#4)
- 8 x Plain washer (#5)

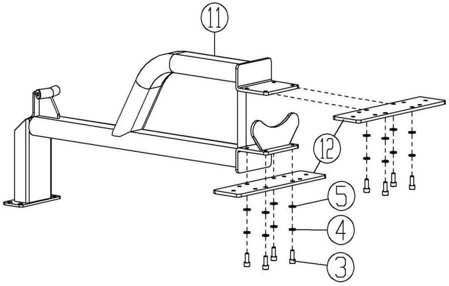

Installation

Step 6:Use the below ways to connect the Side frame II(#11) with Balance weight frame(#1) and the Side frame II(#10)

- 8 x Hexagon socket head screws with cylindrical head (#3)
- 8 x Spring washer (#4)
- 8 x Plain washer (#5)

Tighten the bolt with a wrench before proceeding to the next step

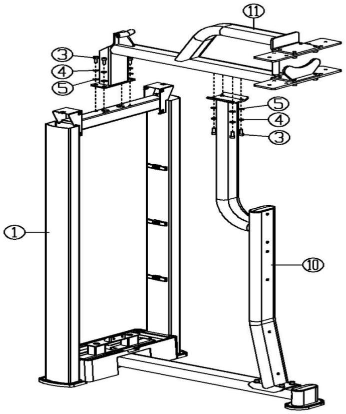

Installation

Step 7:Use the below ways to connect the movable arm(#14) with Plastic washer (#15) and Force arm shaft(#13) and Linkage shaft(#16)

- 2 x Hexagon socket head screws with cylindrical head (#3)
- 2 x Spring washer (#4)
- 2 x Plain washer (#5)

The steps for installing the left and right arms are the same.
Tighten the bolt with a wrench before proceeding to the next step

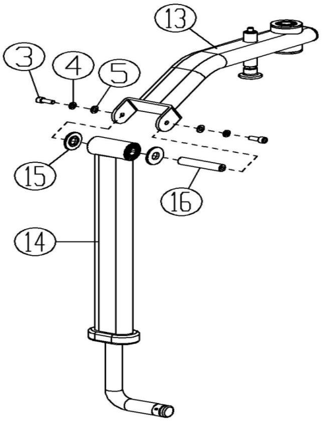

Installation

Step 8:Use the below ways to connect the Left and right flange (#17/#18) and two Force arm shaft(#13) and two Main shaft(#19) and side frame(#11)

- 4 x Hexagon socket head screws with cylindrical head (#3)
- 4 x Spring washer (#4)
- 4 x Plain washer (#5)

Tighten the bolt with a wrench before proceeding to the next step

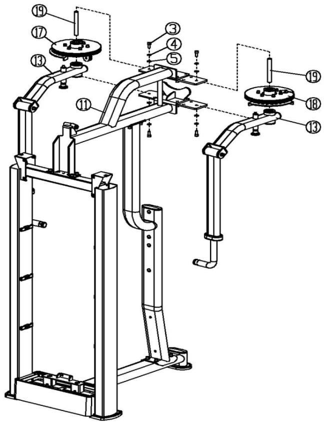

Installation

Step 9:Use the below ways to connect the cushion(#21) and Seat frame(#20)

- 4 x Hexagon socket head screws with cylindrical head (#22)
- 4 x Spring washer (#23)
- 4 x Plain washer (#24)

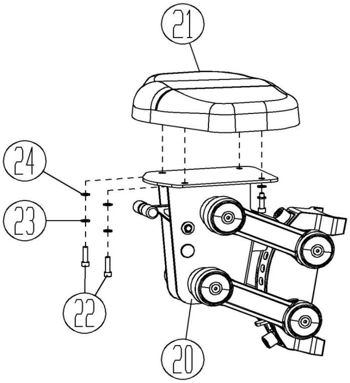

Installation

Step10:Use the below ways to connect the cushion(#20) and side frame(#10)

- 2 x Hexagon socket head screws with cylindrical head (#25)
- 2 x Spring washer (#4)
- 2 x Plain washer (#5)

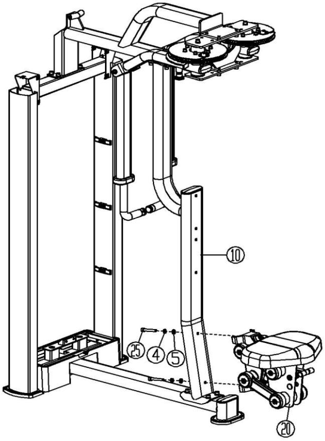

Installation

Step11:Use the below ways to connect the Collision cushion(#26) and side frameII（#11）

- 4 x Hexagon socket head screws with cylindrical head（#22）
- 4 x Spring washer（#23）
- 4x Plain washer（#24）

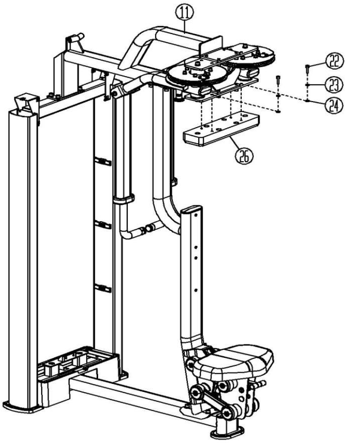

Installation

Step12:Use the below ways to connect the two head pads(#27) and side frame I(#10)

- 4 x Hexagon socket head screws with cylindrical head（#28）

Tighten the bolt with a wrench before proceeding to the next step
Step 13:Install four hole plugs (#29) to side frame I (#10)

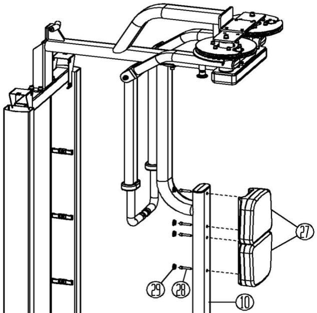

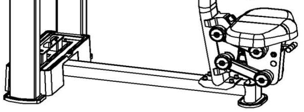

Installation

Step 14:Slide the two counterweight block rubber pads (#31) onto the two guide rods (#30).
Use the below ways to connect the base of weight frames(#32) with two counterweight guide bar(#30)and put into Balance weight frame

- 2 x Hexagon socket head screws with cylindrical head (#33)
- 2 x Spring washer (#23)
- 2x Plain washer (#24)

Tighten the bolt with a wrench before proceeding to the next step
Step 15:Attach the 16 counterweight blocks (#34) to the guide bar (#30) with the spacer facing up.
Install the guide block set (#35) to the guide bar (#30).
Insert the weight stack bolt (#37) into the counterweight block (#34)
Slide the Guide rod fixing plate(#36) to Guide rod(#30)
Use the below ways to Install guide bar fixing plate (#36) to Balance weight frame (#1)

- 2 x Hexagon socket head screws with cylindrical head (#33)

Tighten the bolt with a wrench before proceeding to the next step

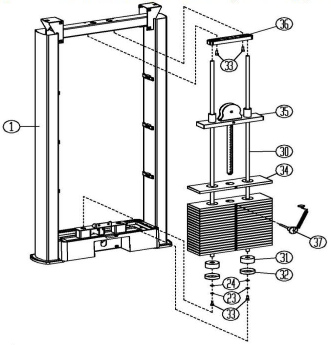

Installation

Step16:Use the below ways to connect the 95 wire wheel (#39) to the balance weight frame (#1)

- 1 x Wire wheel shaft (#40)
- 1 x Hexagon self-locking nut (#42)
- 1 xPlain washer (#41)
- 1 x Plain washer (#5)

Connect two 120 wire wheels (#43) to four wire wheel boxes (#44), and then connect to the side frame II (#11) in the following way:

- 2 x Wire wheel shaft (#40)

Note that these wire wheels are installed together with the wire rope (#38).
Step 17:Attach the ends of the wire rope (#38) to the left/right flange (#17/#18).
Step 18:Connect the two clip Pressure plate (#45) to the left/right flange (#17/#18)

- 6 x Hexagon socket head screws with cylindrical head (#46)

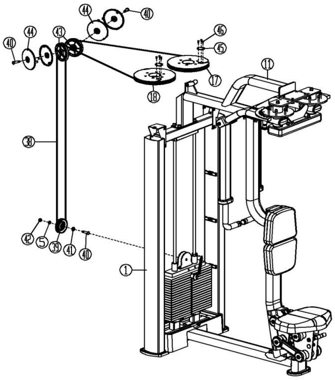

Installation

Step 19:Slide the two Decorative strips (#48) into the two baffles (#47) and connect to the balance weight frame (#1) by using the baffle platen.

Use the following method to connect the two upper guards(50) to the balance weight frame (# 1) :

- 8 x Wire wheel shaft (#7)

Use the following method to connect the Plug cover of stand pipe(#51) to the balance weight frame (#1) :

- 2 x Wire wheel shaft (#7)

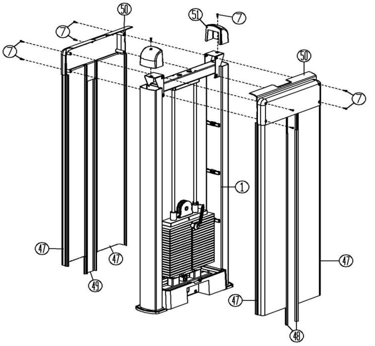

Installation

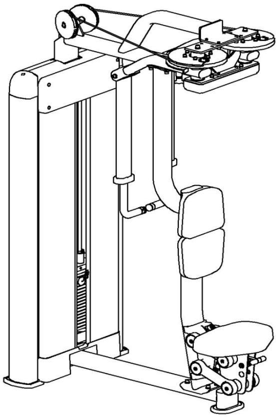

Important Notification

Now PECTORAL FLY/REAR DEILOID has been assembled, You need to take the time to make sure your device is square and vertical,With a spirit level to check whether the guide bar perpendicular in the two directions,If not, then you have to loosen some of the vertical frame reassembly hardware and tighten the bolts.

Accessories List

NO	Name & Specification	Qty
1	Balance weight frame	1
2	connection frame of PECTORAL FLY/REAR DEILOID	1
3	Hexagon socket head screws with cylindrical head（M10*25）	28
4	Spring washer（10）	30
5	Plain washer（10）	31
6	Lower guard	1
7	Hexagon socket head screws with cylindrical head（M5*16）	12
8	Foot pad of Balance weight frame	2
9	Flat oval pad	1
10	Side frame I	1
11	Side frame II	1
12	Pressure plate	2
13	Force arm shaft	2

14	Movable arm	2
15	Plastic washer	2
16	Linkage shaft	2
17	Left flange	1
18	Right flange	1
19	Main shaft	2
20	Seat frame	1
21	Cushion	1

Accessories List

NO	Name & Specification	Qty
22	Hexagon socket head screws with cylindrical head (M8*30)	8
23	Spring washer (8)	10
24	Plain washer (8)	10
25	Hexagon socket head screws with cylindrical head (M10*70)	2
26	Collision cushion	1
27	Head cushion	2
28	Hexagon socket head screws with cylindrical head (M8*40)	4
29	Hole plug	4
30	Universal counterweight guide bar	2
31	rubber pad of weight stack	2
32	base of weight stack	2
33	Hexagon socket head screws with cylindrical head (M8*20)	4
34	weight stack	16
35	Guide block set	1
36	Guide rod fixing plate	1
37	bolt of weight stac	1
38	Wire rope	1
39	95 Wire wheel	1
40	Wire wheel shaft-32	3
41	Plain washer (12)	1
42	Hexagon self-locking nut (M10)	1

Accessories List

NO	Name & Specification	Qty
43	Wire wheel120	2
44	Wire wheel box	4
45	clip Pressure plate	2
46	Hexagon socket head screws with cylindrical head (M5*10)	6
47	baffle	4
48	Decorative strip of weight stack	2
49	Decorative plate of weight stack	1
50	Upper Guard	2
51	Plug cover of stand pipe	2

Note: Pre-assembled parts are not listed in this file.